COB-4BAR

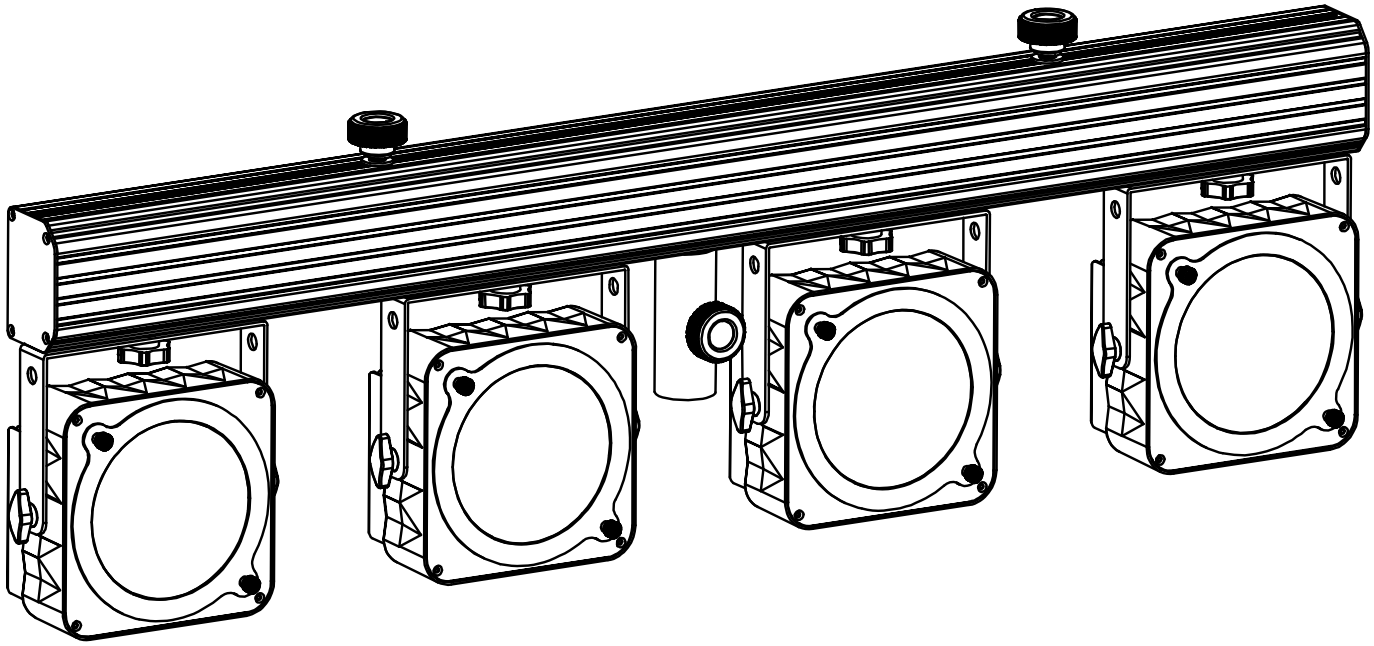

ENGLISH

Operation Manual

Other languages can be downloaded from:
WWW.JB-SYSTEMS.EU

CE

JBSYSTEMS

Version: 3.0

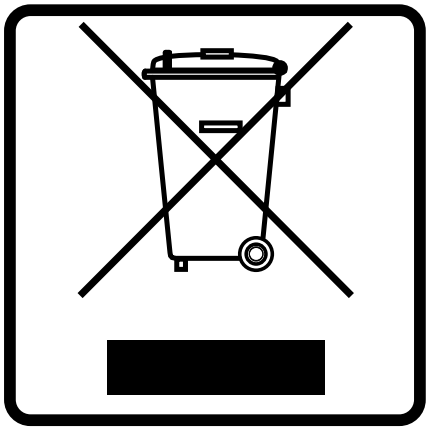

EN - DISPOSAL OF THE DEVICE
Dispose of the unit and used batteries in an environment friendly manner according to your country regulations.

FR - DÉCLASSER L'APPAREIL
Débarrassez-vous de l'appareil et des piles usagées de manière écologique Conformément aux dispositions légales de votre pays.

NL - VERWIJDEREN VAN HET APPARAAT
Verwijder het toestel en de gebruikte batterijen op een milieuvriendelijke manier conform de in uw land geldende voorschriften.

DU - ENTSORGUNG DES GERÄTS
Entsorgen Sie das Gerät und die Batterien auf umweltfreundliche Art und Weise gemäß den Vorschriften Ihres Landes.

ES - DESHACERSE DEL APARATO
Reciclar el aparato y pilas usadas de forma ecologica conforme a las disposiciones legales de su pais.

PT - COMO DESFAZER-SE DA UNIDADE
Tente reciclar a unidade e as pilhas usadas respeitando o ambiente e em conformidade com as normas vigentes no seu país.

OPERATION MANUAL

Thank you for buying this JB SYSTEMS® product. To take full advantage of all possibilities and for your own safety, please read these operating instructions very carefully before you start using this unit.

FEATURES

This unit is radio-interference suppressed. This product meets the requirements of the current European and national guidelines. Conformity has been established and the relevant statements and documents have been deposited by the manufacturer.

- This device was designed to produce decorative effect lighting and is used in light show systems.
- Stylish and compact powered 4BAR containing 4 energy saving COB LED-projectors
- NO separate LEDs: each projector contains a 36W COB LED with perfect color mixing and the look of a traditional lamp !
- Exceptional high light output (exceeding the output of traditional PAR56 300W lamps !)
- IR-remote controller included: no difficult controllers needed, perfect for DJs !
- Equipped with 2 extra mains sockets, each with remote on/off control: any (LED) effect up to 500W can be connected !
- Different working modes:
  - Standalone with IR-remote: automatic / beat synchronized color patterns + on/off control of 2 (optional) effect lights
  - Master/slave mode: several bars can be used together for wonderful preprogrammed, music synchronized lightshows.
  - Can be controlled by our famous LEDCON-02 Mk2, LEDCON-XL or the optional “COB-4BAR FOOTCONTROL” remote.
  - DMX-controlled: different channel modes with program selection and individual RGB control.
- LED-Projector beam angles = 15° with lens / 100° without lens
- Perfect for mobile applications: only 1m long and weighs only 8kg !
- Many applications possible: Discotheques, DJs, rental companies, ...
- 0-100% dimming and ultra-fast strobe function (no additional strobes needed!)
- Excellent built-in programs for wonderful, ever changing, light shows!
- Optional foot controller available: perfect for small music bands!
- Special USB-connection for use with an optionally available Wireless DMX-dongle.
- Backlit alphanumeric 2x 16character LCD-display for easy menu navigation.
- Standard 35mm pole adapter included.
- A light but strong case for easy transport is included with the 4BAR.

BEFORE USE

- Before you start using this unit, please check if there’s no transportation damage. Should there be any, do not use the device and consult your dealer first.
- **Important:** This device left our factory in perfect condition and well packaged. It is absolutely necessary for the user to strictly follow the safety instructions and warnings in this user manual. Any damage caused by mishandling is not subject to warranty. The dealer will not accept responsibility for any resulting defects or problems caused by disregarding this user manual.
- Keep this booklet in a safe place for future consultation. If you sell the fixture, be sure to add this user manual.

Check the contents:

Check that the packing contains the following items:

- Operating instructions
- COB-4BAR
- Wireless remote control
- Power Cable
- Flight-Case
- 2 spare IEC plugs for the extra effect power outputs

SAFETY INSTRUCTIONS:

CAUTION
RISK OF ELECTRIC SHOCK
DO NOT OPEN

CAUTION: To reduce the risk of electric shock, do not remove the top cover. No user-serviceable parts inside. Refer servicing to qualified service personnel only.

The lightning flash with arrowhead symbol within the equilateral triangle is intended to alert the use or the presence of un-insulated “dangerous voltage” within the product’s enclosure that may be of sufficient magnitude to constitute a risk of electric shock.

The exclamation point within the equilateral triangle is intended to alert the user to the presence of important operation and maintenance (servicing) instructions in the literature accompanying this appliance.

This symbol means: indoor use only

This symbol means: Read instructions

This symbol means: Safety Class I appliance

This symbol determines: the minimum distance from lighted objects. The minimum distance between light-output and the illuminated surface must be more than x meters

The device is not suitable for direct mounting on normally flammable surfaces. (suitable only for mounting on non-combustible surfaces)

RISK GROUP 2
CAUTION:
Do not stare at operating lamp

CAUTION: Do not stare at operating lamp.
May be harmful to the eyes.

- To protect the environment, please try to recycle the packing material as much as possible.
- To prevent fire or shock hazard, do not expose this appliance to rain or moisture.
- To avoid condensation to be formed inside, allow the unit to adapt to the surrounding temperatures when bringing it into a warm room after transport. Condense sometimes prevents the unit from working at full performance or may even cause damages.
- This unit is for indoor use only.
- Don’t place metal objects or spill liquid inside the unit. Electric shock or malfunction may result. If a foreign object enters the unit, immediately disconnect the mains power.
- Locate the fixture in a well ventilated spot, away from any flammable materials and/or liquids. The fixture must be fixed at least 50cm from surrounding walls.
- Don’t cover any ventilation openings as this may result in overheating.
- Prevent use in dusty environments and clean the unit regularly.
- Keep the unit away from children.
- Inexperienced persons should not operate this device.
- Maximum safe ambient temperature is 40°C. Don’t use this unit at higher ambient temperatures.
- Make sure the area below the installation place is free from unwanted persons during rigging, de-rigging and servicing.
- Allow the device about 10 minutes to cool down before to start servicing.
- Always unplug the unit when it is not used for a longer time or before to start servicing.
- The electrical installation should be carried out by qualified personal only, according to the regulations for electrical and mechanical safety in your country.
- Check that the available voltage is not higher than the one stated on the unit.
- The power cord should always be in perfect condition. Switch the unit immediately off when the power cord is squashed or damaged. It must be replaced by the manufacturer, its service agent or similarly qualified persons in order to avoid a hazard.
- Never let the power-cord come into contact with other cables!
- This fixture must be earthed in order to comply with safety regulations.
- Don’t connect the unit to any dimmer pack.
- Always use an appropriate and certified safety cable when installing the unit.
- In order to prevent electric shock, do not open the cover. There are no user serviceable parts inside.
- **Never** repair a fuse or bypass the fuse holder. **Always** replace a damaged fuse with a fuse of the same type and electrical specifications!
- In the event of serious operating problems, stop using the fixture and contact your dealer immediately.

- The housing and the lenses must be replaced if they are visibly damaged.
- Please use the original packing when the device is to be transported.
- Due to safety reasons it is prohibited to make unauthorized modifications to the unit.

Important: Never look directly into the light source! Don't use the effect in the presence of persons suffering from epilepsy.

DESCRIPTION:

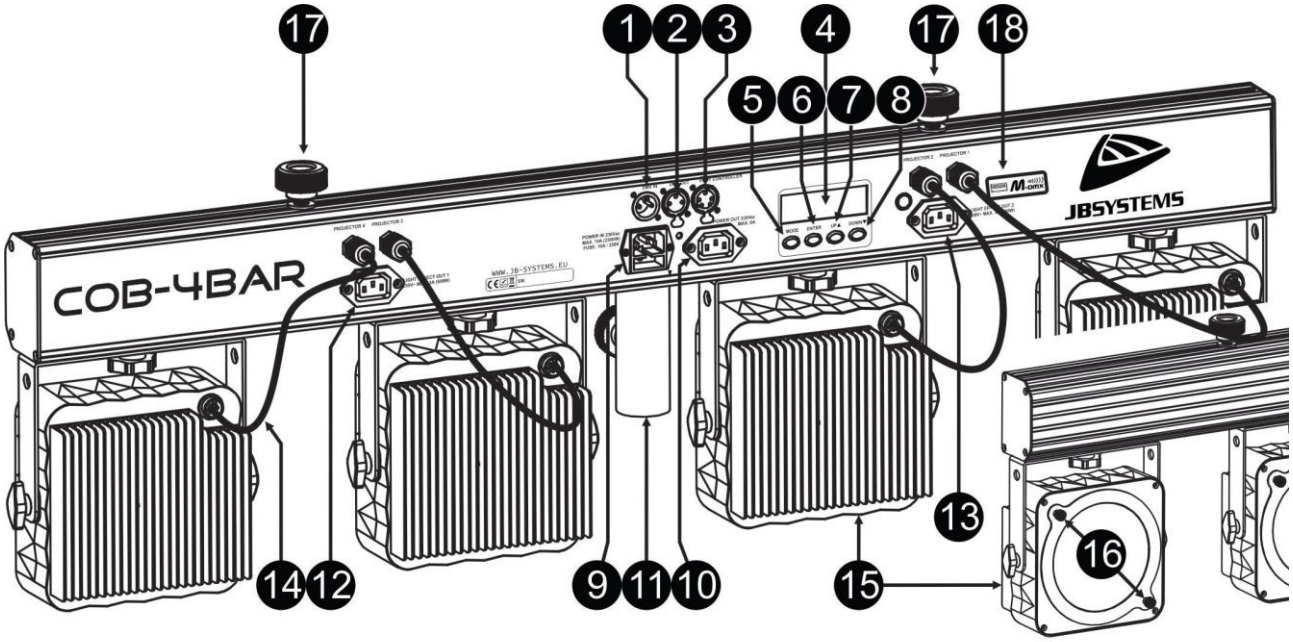

1. **DMX INPUT:** 3pin male XLR-connector used to connect the COB-4BAR with the DMX controller or with the previous unit in the DMX chain.
2. **DMX OUTPUT:** 3pin female XLR-connector used to connect the COB-4BAR with the next unit in the DMX chain.
3. **FOOT CONTROLLER INPUT:** here you can connect the optional foot controller
4. **DISPLAY** shows the various menus and the selected functions.
5. **MODE button:** used to browse the different functions in the menu
6. **ENTER button:** used to confirm your choice or to enter the setup mode of a function.
7. **UP button:** to increase the values shown on the display.
8. **DOWN button:** to lower the values shown on the display.
9. **Mains input:** with IEC socket and integrated fuse holder, connect the supplied mains cable here..
10. **Mains output with IEC socket:** you can use a special IEC power cable to connect this output with the mains input of the next bar or projector for easier linking.
    Important note: *the total maximum load may NOT exceed 10A (±2300 Watt) !*
11. **35mm STAND ADAPTER:** used to put the 4bar easily on top of a light stand
12. **Extra Power Output 1:** this output can be used to power an extra light effect or projector. In the menu of the 4BAR you can choose if the power should be continuously ON or if it should be possible to switch the power ON/OFF via DMX / wireless control / foot switch.
    Important note: *the maximum load may NOT exceed 3A (±690 Watt) !*
13. **Extra Power Output 2:** this output can be used to power an extra light effect or projector. In the menu of the 4BAR you can choose if the power should be continuously ON or if it should be possible to switch the power ON/OFF via DMX / wireless control / foot switch.
    Important note: *the maximum load may NOT exceed 3A (±690 Watt) !*
14. **Special cables** with power signal for the passive COB panels
15. **Passive COB panels:** each containing 1 RGB COB led producing colorful sharp 15° beams.
16. **Removable 15° lens:** each of the COB panels is equipped with a 15° lens that can be removed by unscrewing the 2 screws that keep it in place. Without the lens the projectors have a beam angle of 100° which makes the unit perfect as wash projector for all kinds of applications.
17. **Sliding mechanism:** can be used to add an extra small light effect or projector. You can also fix 2 (optional) mounting clamps on the sliding mechanism to easily mount the bar in your truss.

18. W-DMX DONGLE INPUT: this USB-input can be used to connect an (optionally available) wireless DMX-dongle. With this dongle you can control the projector via wireless DMX.

OVERHEAD RIGGING

- **<u>Important:</u> The installation must be carried out by qualified service personal only. Improper installation can result in serious injuries and/or damage to property. Overhead rigging requires extensive experience! Working load limits should be respected, certified installation materials should be used, the installed device should be inspected regularly for safety.**
- Make sure the area below the installation place is free from unwanted persons during rigging, de-rigging and servicing.
- The device should be installed out of reach of people and outside areas where persons may walk by or be seated.
- Before rigging make sure that the installation area can hold a minimum point load of 10times the device's weight.
- Always use a certified safety cable that can hold 12times the weight of the device when installing the unit. This secondary safety attachment should be installed in a way that no part of the installation can drop more than 20cm if the main attachment fails.
- The device should be well fixed; a free-swinging mounting is dangerous and may not be considered!
- Don't cover any ventilation openings as this may result in overheating.
- The operator has to make sure that the safety-relating and machine-technical installations are approved by an expert before using them for the first time. The installations should be inspected every year by a skilled person to be sure that safety is still optimal.

ELECTRICAL INSTALLATION

⚠ **<u>Important:</u> The electrical installation should be carried out by qualified personal only, according to the regulations for electrical and mechanical safety in your country.**

<u>Electrical installation for 1 standalone unit:</u>

- Insert the mains cable. The unit starts working immediately in the last selected mode.
- Refer to chapter HOW TO SETUP to learn how to switch between the different working modes.

If you like, you can control the unit using the optionally available:

- **COB-4BAR FOOTCONTROL:** foot controller, perfect for music bands etc.

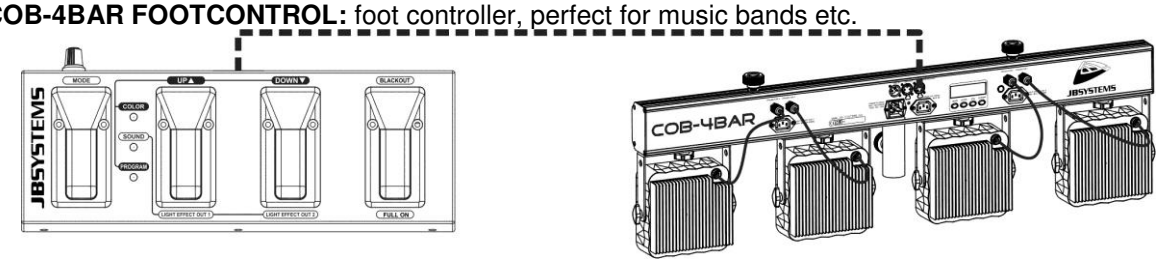

- **LEDCON-02 Mk2:** (must be Mk2 version!) perfect for use by DJs!
  See chapters HOW TO SETUP and OPERATING INSTRUCTIONS for more information.

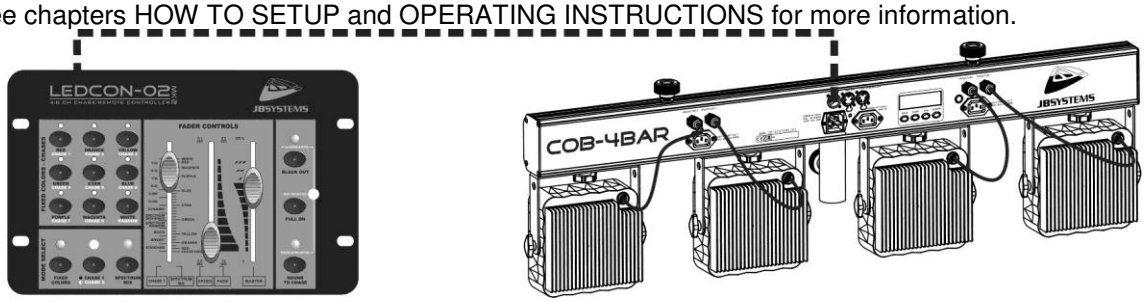

Electrical installation for two or more units in master/slave:

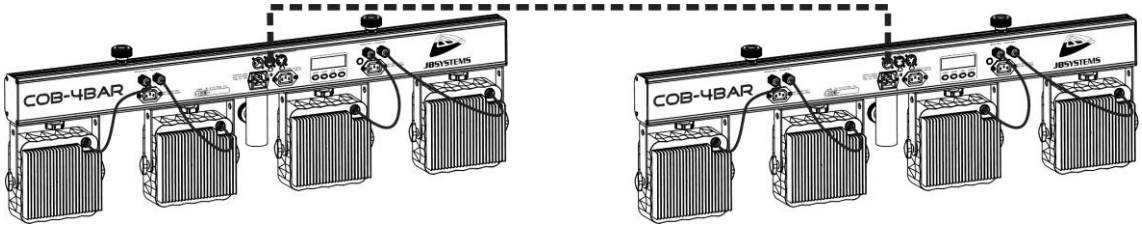

- Connect several units together using good quality balanced microphone cables. The unit that has no cable connected to its DMX-input is the "master", the others are the slave units.
- Make sure that all units are connected to the mains.
- Refer to chapter HOW TO SETUP for more information.
- Done!

Note: *of course you can always add a foot controller or LEDCON-02 Mk2 to the master for more control.*

Electrical installation for two or more units in DMX-mode:

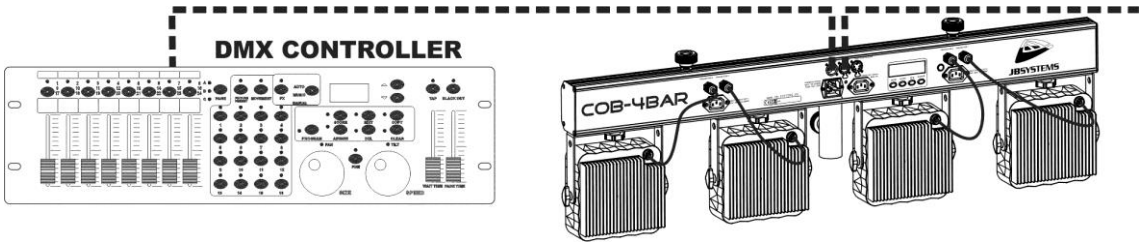

- The DMX-protocol is a widely used high speed signal to control intelligent light equipment. You need to "daisy chain" your DMX controller and all the connected units with a good quality balanced cable.
- To prevent strange behavior of the light effects, due to interferences, you must use a 90Ω to 120Ω terminator at the end of the chain. Never use Y-splitter cables, this simply won't work!

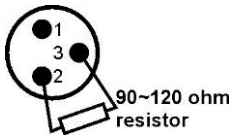

- Make sure that all units are connected to the mains.
- Each light effect in the chain needs to have its proper start address so it knows which commands from the controller it has to decode. In the section HOW TO SETUP you will learn how to set the DMX addresses. If for example you use the 4 channel DMX mode, a possible address setup could be: unit1 = 001 ~ unit2 = 005 ~ unit3 = 009 ~ unit4 = 013 ~ etc.

HOW TO SETUP:

DMX512 Address Setting

Used to set the start address in a DMX setup.

- Press the MODE button until **DMX MODE** is shown on the display.
- Press the ENTER button to enter the configuration mode
- Use the DOWN and UP buttons to change the DMX address.
- Once the correct address is shown on the display, press the ENTER button to confirm.
- The channel mode will now start to blink on the display (03, 05, 06, 08, 12, 17, 18 Channels or LC-XL)
- Use the DOWN and UP buttons if you would like to change the channel mode
- Press the ENTER button to confirm

DMX Channel Mode

The unit has 7 different DMX channel modes. With this function you can choose the DMX mode you want to use. Refer to the DMX-charts to see the differences.

- Press the MODE button until **DMX MODE** is shown on the display.
- Press the ENTER button to enter the configuration mode
- The DMX address will start blinking on the display
- Use the DOWN and UP buttons if you want to change this DMX start address.
- Press the ENTER button to confirm.
- The channel mode will now start blinking on the display (03, 05, 06, 08, 12, 17 or 18)
- Use the DOWN and UP buttons if you would like to change the channel mode
- Press the ENTER button to confirm

SLAVE MODE + FOOT CONTROLLER

Used to set the unit in slave mode when you want to have synchronized effects with the master unit. (when the first unit is running it's automatic programs or is set in a fixed color)
Used when you want to control the bar with the optional foot controller

- Press the MODE button until **SLAVE** is shown on the display.
- Press the ENTER button to confirm.

IMPORTANT: If you want to use the automatic modes and make the settings directly on the bar, you need to deactivate the IR remote control receiver in the bar. (IR ACTIVE = OFF)

SOUND MODE

Used to set the parameters for the automatic Sound Mode.

- Press the MODE button until **SOUND MODE** is shown on the display.
- Press the ENTER button to enter the configuration mode
- The value of the sensitivity (SENS) will start blinking on the display
- Use DOWN and UP buttons to change the sensitivity of the build-in microphone (00 = minimal sensitivity, 31 = maximal sensitivity).
- Press the ENTER button to confirm.
- The value of the frequency (FQN) will start blinking on the display
- Use DOWN and UP buttons to change the number of times each automatic program should be repeated before to go automatically to the next automatic program.
- Press the ENTER button to confirm.

IMPORTANT: Don't forget the bar is equipped with a master dimmer. If the output seems to be too low or if there is no light output at all, please check the MASTER DIM setting !

STATIC COLOR MODE:

Used to set a static color for the projectors.

- Press the MODE button until **01.STATIC** or **xx.EFFECT** (number 02 to 14 followed by EFFECT) is shown on the display.
- Press the ENTER button to enter the configuration mode
- The actual mode (static or effect mode) is blinking on the display
- If necessary, use the DOWN and UP buttons to select **01.STATIC**
- Press the ENTER button to enter the configuration mode for the static colors
- Use DOWN and UP buttons to select **COLOR_CW** (cold white), **COLOR_WW** (warm white) or **COLOR SET** (to compose your own color).
- If you have chosen **COLOR_CW** or **COLOR_WW** : just press the ENTER button to confirm your choice
- If you have chosen **COLOR SET**: press the ENTER button to access the manual color settings
    - **RED** is blinking on the display: use the DOWN and UP buttons to set the intensity of the red color (000 = minimum, 255 = maximum)
    - Press the ENTER button to confirm and to go to the next color
    - **GREEN** is blinking on the display: use the DOWN and UP buttons to set the intensity of the green color (000 = minimum, 255 = maximum)
    - Press the ENTER button to confirm and to go to the next color
    - **BLUE** is blinking on the display: use the DOWN and UP buttons to set the intensity of the blue color (000 = minimum, 255 = maximum)
    - Press the ENTER button to confirm

IMPORTANT: Don't forget the bar is equipped with a master dimmer. If the output seems to be too low or if there is no light output at all, please check the MASTER DIM setting !

SLOW COLOR FADE MODE:

Used to let the projectors slowly fade from one color into another.

- Press the MODE button until **01.STATIC** or **xx.EFFECT** (number 02 to 14 followed by EFFECT) is shown on the display.
- Press the ENTER button to enter the configuration mode
- The actual mode (static or effect mode) is blinking on the display
- Use the DOWN and UP buttons to select **02.EFFECT (fading from one color into another) or 04.EFFECT (each color fading on and off)**
- Press the ENTER button to confirm

- Speed starts blinking on the display: Use the DOWN and UP buttons to set the desired running speed (00 = slow, 99 = maximum speed)
- Press the ENTER button to confirm
- Flash starts blinking on the display: Use the DOWN and UP buttons to set the desired speed for the stroboscopic effect (00 = off, 99 = maximum speed)
- Press the ENTER button to confirm

IMPORTANT: Don't forget the bar is equipped with a master dimmer. If the output seems to be too low or if there is no light output at all, please check the MASTER DIM setting !

AUTOMATIC CHASE MODE:

Used to set the automatic Chase Mode so colors will change automatically at a constant speed.

- Press the MODE button until **01.STATIC** or **xx.EFFECT** (number 02 to 14 followed by EFFECT) is shown on the display.
- Press the ENTER button to enter the configuration mode
- The actual mode (static or effect mode) is blinking on the display
- Use the DOWN and UP buttons to select one of the 11 chase modes (03, 05, 06, 07, 08, 09, 10, 11, 12, 13 or 14.EFFECT).
- Press the ENTER button to confirm
- Speed starts blinking on the display: Use the DOWN and UP buttons to set the desired running speed (00 = slow, 99 = maximum speed)
- Press the ENTER button to confirm
- Flash starts blinking on the display: Use the DOWN and UP buttons to set the desired speed for the stroboscopic effect (00 = off, 99 = maximum speed)
- Press the ENTER button to confirm.

Remark: if you have selected **13.EFFECT** or **14.EFFECT**, you can choose 2 colors for your chase program:

  - C1 will blink on the display
  - Use the DOWN and UP buttons to and UP buttons to select the first color of your chase program.
  - Press the ENTER button to confirm
  - C2 will now blink on the display
  - Use the DOWN and UP buttons to and UP buttons to select the second color of your chase program.
  - Press the ENTER button to confirm

IMPORTANT: Don't forget the bar is equipped with a master dimmer. If the output seems to be too low or if there is no light output at all, please check the MASTER DIM setting !

AUTO RUN:

Used to start the automatic Random Chase Mode. The bar will play each individual chase program at random. The speed and strobe speed that you have set for each individual chase program will be used during this show. (see previous description: AUTOMATIC CHASE MODE)

- Press the MODE button until **AUTO RUN** is shown on the display.
- Press the ENTER button to enter the configuration mode
- FQN will start blinking on the display.
- Use the DOWN and UP buttons to change the number of times each program should be repeated before to go automatically to the next automatic program. (01 to 99 times)
- Press the ENTER button to confirm

FLOW INVERT

Used to invert the flow direction of the automatic chases. This can be useful when you use several bars together in master / slave mode

- Press the MODE button until **FLOW INVERT** is shown on the display.
- Press the ENTER button to enter the configuration mode
- Use the DOWN and UP buttons to select ON (flow is inverted) or OFF (flow is not inverted)
- Press the ENTER button to confirm

MASTER DIM

This is the general master dimmer for ALL the build-in effect of the 4BAR.

- Press the MODE button until **MASTER DIM** is shown on the display.
- Press the ENTER button to enter the configuration mode
- Use the DOWN and UP buttons to change the general dimmer level of the 4BAR
- Press the ENTER button to confirm

If you would have the impression the 4BAR is not working, please check if this MASTER DIMMER is not set to zero or to a too low level !

IR ACTIVE

Activate this function If you want to control the 4BAR with the small wireless remote control.
Always deactivate this function when you don't want to use the wireless remote control.

- Press the MODE button until **IR ACTIVE** is shown on the display.
- Press the ENTER button to enter the configuration mode
- Use the DOWN and UP buttons to select ON (wireless controller can be used) or OFF (cannot be controlled via the wireless remote controller)
- Press the ENTER button to confirm

IMPORTANT: If you don't want to use the wireless remote controller, you need to deactivate the IR remote control receiver in the bar. (IR ACTIVE = OFF)

LIGHT EFFECT OUT (only when controlled via DMX)

With this option you can decide if the 2 extra power outputs for extra light effect (12) and (13) can be turned ON/OFF via DMX or if the power needs always to be ON

- Press the MODE button until **LIGHT EFFECT OUT** is shown on the display.
- Press the ENTER button to enter the configuration mode
- Use the DOWN and UP buttons to select DMX CONTROL ON (the power outputs can be switched on or off via DMX) or DMX CONTROL OFF (the power outputs are continuously ON)
- Press the ENTER button to confirm

DEFAULT modes

If you want to use the 4bar with the Ledcon-02 or the Ledcon-XL controller, you need to modify a lot of settings in the bar. If you forget one, it will not work…
To make it easy for you, we have added these default modes. Just select the Ledcon-XL or the Ledcon-02 mode and all the settings will be automatically correct. All you still have to do is to set the desired DMX address.
If you want to return to the original factory mode, select the factory preset.
You can find the settings that are done automatically in the chart below:

	Factory Default	Ledcon-02	Ledcon-XL
Channel Mode		18 CH	LC-XL
Sound sensitivity	Max (31)		
Flow invert	OFF	OFF	OFF
Master Dim	100%	100%	100%
IR ACTIVE	OFF	OFF	OFF
LIGHT EFFECT OUT (230V connectors)	ON (controllable via DMX)	OFF (NOT controllable via DMX) Power continuous ON	OFF (NOT controllable via DMX) Power continuous ON

- Press the MODE button until **DEFAULT** is shown on the display.
- Press the ENTER button to enter the configuration mode
- Use the DOWN and UP buttons to select the desired default mode
- Press the ENTER button to confirm

OPERATING INSTRUCTIONS

A. Standalone 1unit:

- Just connect the projector to the mains.
- Select one of the automatic, sound or static color modes
- Refer to chapter HOW TO SETUP to learn how to make the settings.

B. Two or more units in master/slave setup:

- Connect the units together. Refer to the chapter "electrical installation" to learn how to do this.

- Select one of the automatic, sound or static color modes on the master (the first COB-4BAR in the DMX chain)
- Set all the other bars in SLAVE mode
- The projectors will now follow the program of the master COB-4BAR so they all work synchronously.

C. Controlled by the wireless remote controller:

To be able to use the wireless remote control, you need to enable this option in the 4BAR:

- Press the MODE button until **IR ACTIVE** is shown on the display.
- Press the ENTER button to be able to change the setting
- Use the DOWN and UP buttons to enable or to disable the remote control option (ON = remote control enabled, OFF = remote control disabled).
- Press the ENTER button to confirm
- Press the MODE button until **SLAVE & FOOT CONTROL** is shown on the display.
- Press the ENTER button to confirm

Functions:

- **BL:** is used to switch the LEDs off/on
- **SP:** is used to set the running speed when you are using the color change or the color fade modes. Press this button several times to select one of the 4 preprogrammed speeds. (Slow, medium, fast, off)
- **BRIGHTNESS (Master Dimmer)**: is used to set the General brightness of your projectors. Press this button several times to select one of the 4 preprogrammed brightness levels. (50%, 75%, 100%, off)
- **FL:** is used to activate the strobe (Flashing) mode. Press this button several times to select one of the 4 preprogrammed flash frequencies. (Slow, medium, fast, off)
- **R** is used to set the intensity of the Red LED source. Press this button several times to select one of the 4 preprogrammed brightness levels. (50%, 75%, 100%, off). Don't forget that the brightness is also influenced by the master dimmer ! (= BRIGHTNESS button)
- **G** is used to set the intensity of the Green LED source. Press this button several times to select one of the 4 preprogrammed brightness levels. (50%, 75%, 100%, off). Don't forget that the brightness is also influenced by the master dimmer ! (= BRIGHTNESS button)
- **B** is used to set the intensity of the Blue LED source Press this button several times to select one of the 4 preprogrammed brightness levels. (50%, 75%, 100%, off). Don't forget that the brightness is also influenced by the master dimmer ! (= BRIGHTNESS button)
- **W** is used to set the intensity of the White color (Red + Green + Blue together) Press this button several times to select one of the 4 preprogrammed brightness levels. (50%, 75%, 100%, off). Don't forget that the brightness is also influenced by the master dimmer ! (= BRIGHTNESS button)
- **Pr1, Pr2, Pr3, Pr4:** These buttons are used to run the built-in color chase programs. Brightness, speed and flash rate can be adjusted with the buttons **BRIGHTNESS**, **SP** and **FL**
- **D1, D2, D3, D4:** These buttons are used to run the built-in color fade programs. Brightness, speed and flash rate can be adjusted with the buttons **BRIGHTNESS**, **SP** and **FL**
- **SA1, SA2, SA3, SA4:** These buttons are used to run the built-in sound controlled chase programs. Brightness and flash rate can be adjusted with the buttons **BRIGHTNESS** and **FL**

Note: Maximum distance between the wireless remote and the fixture = +/- 10m

D. Controlled by the LEDCON-02 Mk2:

Follow the steps below to control the bar using the LEDCON-02 Mk2

1. **Select the specific LEDCON-02 setup in the default modes:**

- Press the MODE button until **DEFAULTS** is shown on the display.
- Press the ENTER button to go into the Defaults mode.
- Use the DOWN and UP buttons till LEDCON-02 appears on the display

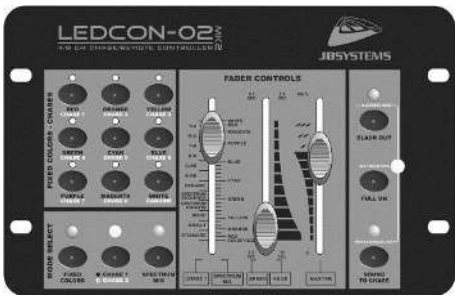

- Press the ENTER button
- The bar will ask you to confirm. Use the DOWN and UP buttons to select YES.
- Press the ENTER button to confirm your choice.

2. Set the correct DMX address:

- See previous chapter HOW TO SETUP to set the DMX address
  - If you use the LEDCON-02 in 4CH mode you have to select DMX address **001**
  - If you use the LEDCON-02 in 8CH mode and you want to use the bar for the first 4 channels (first 4-bar) you have also to select DMX address **001**
  - If you use the LEDCON-02 in 8CH mode and you want to use the bar for the last 4 channels (second 4-bar) you have to select DMX address **017**
  - For instructions on how to use the LEDCON-02 Mk2: please check the user manual of this controller.

  - *The COB-4BAR is only compatible with LEDCON-02 Mk2, not with the LEDCON-02 !*
  - *While used with the LEDCON-02 Mk2, the 2 power outputs (12+13) cannot be controlled, they will be on all the time!*

E. Controlled by the LEDCON-XL:

On the Ledcon-XL itself, you will have to set the **UNIT ID** for each of the 4 projectors of the 4-bar to **RGB**

Follow the steps below to configure the COB-4BAR

1. Select the specific LEDCON-XL setup in the default modes:

- Press the MODE button until **DEFAULTS** is shown on the display.
- Press the ENTER button to go into the Defaults mode.
- Use the DOWN and UP buttons till LEDCON-XL appears on the display
- Press the ENTER button
- The bar will ask you to confirm. Use the DOWN and UP buttons to select YES.
- Press the ENTER button to confirm your choice.

2. Set the correct DMX address:

- See previous chapter HOW TO SETUP to set the DMX address
  - If you use the LEDCON-XL in 4CH mode you have to select DMX address **001**
  - If you use the LEDCON-XL in 8CH mode and you want to use the bar for the first 4 channels (first 4-bar) you have also to select DMX address **001**
  - If you use the LEDCON-XL in 8CH mode and you want to use the bar for the last 4 channels (second 4-bar) you have to select DMX address **033**
  - For instructions on how to use the LEDCON-XL: please check the user manual of this controller.
  - *While used with the LEDCON-XL, the 2 power outputs (12+13) cannot be controlled, they will be on all the time!*

F. Controlled by the optional foot controller:

To be able to use the foot controller, you need to enable this option in the 4BAR:

- Press the MODE button until **SLAVE & FOOT CONTROL** is shown on the display.
- Press the ENTER button to confirm.

General description of the foot controller:

- **ROTARY Knob:** is used to set the sensitivity of the build-in microphone for the sound controlled mode.
- **MODE Switch:** is used to select one of the 3 different working modes: COLOR, SOUND, PROGRAM
- **UP & DOWN Switches:** are used to select the different program options
- **BLACKOUT Switch:** is used to switch the LEDs off/on or to select the Full On function.

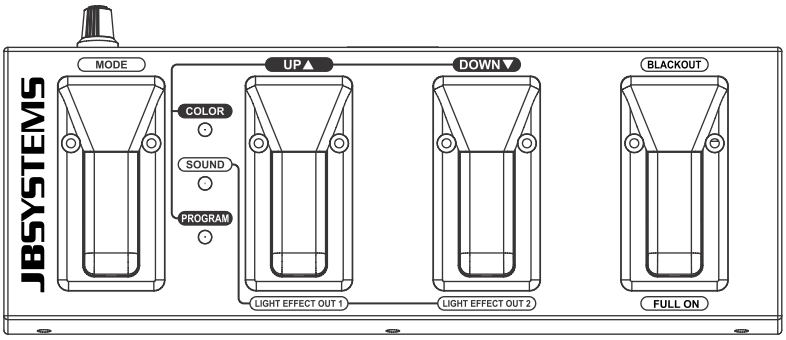

Modes & Functions :

Press the MODE pedal to select the different working modes.

- COLOR Mode (Red LED is lit): in this mode you can select different static colors
  - UP & DOWN pedals: can be used to select one of the different static colors.
  - BLACKOUT pedal: press this pedal shortly to put the bar in blackout (the red, the green and the yellow LEDs on the pedal board are lit). If you press this pedal for about 3 seconds, the bar will go in Full On mode (all the projectors at full power in white color)
- SOUND Mode (Green LED is lit): in this mode you can select different sound controlled chases (don't forget to set the sensitivity of the build-in microphone via the rotary knob on the pedal board)
  - UP & DOWN pedals: can be used to select one of the different sound modes.
  - BLACKOUT pedal: press this pedal shortly to put the bar in blackout (the red, the green and the yellow LEDs on the pedal board are lit). If you press this pedal for about 3 seconds, the bar will return to COLOR Mode in Full On mode (all the projectors at full power in white color)
- SOUND Mode (Yellow LED is lit): in this mode you can select different automatic chase modes
  - UP & DOWN pedals: can be used to select one of the different automatic chase modes.
  - BLACKOUT pedal: press this pedal shortly to put the bar in blackout (the red, the green and the yellow LEDs on the pedal board are lit). If you press this pedal for about 3 seconds, the bar will return to COLOR Mode in Full On mode (all the projectors at full power in white color)

Extra Function:

The UP & DOWN pedals can also be used to switch on/off the 2 power outputs for the additional fixtures. Press the UP pedal for about 3 seconds to switch on/off power output 1. Press the DOWN pedal for about 3 seconds to switch on/off power output 2.

G. Controlled by a universal DMX-controller:

- Connect all units together. Refer to the chapter "Electrical installation for two or more units in DMX-mode" to learn how to do this (don't forget to address all units properly!)
- Connect all units to the mains and turn on the DMX controller.

Since each unit has its own DMX-address, you can control them individually. Remember that each unit uses 3, 5, 6, 8, 12, 16, 17 or 18 DMX Channels, depending on the DMX-mode you have selected in the menu. See the different DMX charts below:

DMX Chart for the 3 channel DMX-Mode

Channel:	Name	Value:	Function:
1	Red	000-255	Dimmer (0-100%)
2	Green	000-255	Dimmer (0-100%)
3	Blue	000-255	Dimmer (0-100%)

DMX Chart for the 5 channel DMX-Mode

Channel:	Name	Value:	Function:
1	Red	000-255	Dimmer (0-100%)
2	Green	000-255	Dimmer (0-100%)
3	Blue	000-255	Dimmer (0-100%)
4	Extra Power output 1	000-127	Power OFF
		128-255	Power ON
5	Extra Power output 2	000-127	Power OFF
		128-255	Power ON

DMX Chart for the 6 channel DMX-Mode

Channel:	Name	Value:	Function:
1	Red 1	000-255	Dimmer Projector 1 & 2 (0-100%)
2	Green 1	000-255	Dimmer Projector 1 & 2 (0-100%)
3	Blue 1	000-255	Dimmer Projector 1 & 2 (0-100%)
4	Red 2	000-255	Dimmer Projector 3 & 4 (0-100%)
5	Green 2	000-255	Dimmer Projector 3 & 4 (0-100%)
6	Blue 2	000-255	Dimmer Projector 3 & 4 (0-100%)

DMX Chart for the 8 channel DMX-Mode

Channel:	Name	Value:	Function:
1	Dimmer	000-255	Master Dimmer (0-100%)
2	Strobe	000-007	No Strobe
		008-037	Random Strobe
		038-067	Sound Strobe
		068-255	Strobe Speed (slow to fast)
3	Automatic Color mode	000-007	No automatic mode
		008-247	Color Fade speed (slow to fast)
		248-255	Sound Chase
4	Red	000-255	Dimmer (0-100%)
5	Green	000-255	Dimmer (0-100%)
6	Blue	000-255	Dimmer (0-100%)
7	Extra Power output 1	000-127	Power OFF
		128-255	Power ON
8	Extra Power output 2	000-127	Power OFF
		128-255	Power ON

DMX Chart for the 12 channel DMX-Mode

Channel:	Name	Value:	Function:
1	Red 1	000-255	Dimmer Projector 1 (0-100%)
2	Green 1	000-255	Dimmer Projector 1 (0-100%)
3	Blue 1	000-255	Dimmer Projector 1 (0-100%)
4	Red 2	000-255	Dimmer Projector 2 (0-100%)
5	Green 2	000-255	Dimmer Projector 2 (0-100%)
6	Blue 2	000-255	Dimmer Projector 2 (0-100%)
7	Red 3	000-255	Dimmer Projector 3 (0-100%)
8	Green 3	000-255	Dimmer Projector 3 (0-100%)
9	Blue 3	000-255	Dimmer Projector 3 (0-100%)
10	Red 4	000-255	Dimmer Projector 4 (0-100%)
11	Green 4	000-255	Dimmer Projector 4 (0-100%)
12	Blue 4	000-255	Dimmer Projector 4 (0-100%)

DMX Chart for the 17 channel DMX-Mode

Channel:	Name	Value:	Function:
1	Color Macro's & Automatic Color Modes	000-015	OFF
		016-023	Red
		024-031	Green
		032-039	Blue
		040-047	Red + Green
		048-055	Green + Blue
		056-063	Red + Blue
		064-071	White
		072-079	Color 1
		080-087	Color 2
		088-095	Color 3
		096-103	Color 4
		104-111	Color 5
		112-119	Color 6
		120-127	Color 7
		128-135	Color 8
		136-143	Color Fade
		144-151	Color Chase 1
		152-159	Color Chase 2

		160-167	Color Chase 3
		168-175	Color Chase 4
		176-183	Color Chase 5
		184-191	Color Chase 6
		192-199	Color Chase 7
		200-207	Color Chase 8
		208-215	Color Chase 9
		216-223	Color Chase 10
		224-231	Color Chase 11
		232-239	Color Chase 12
		244-255	Sound Active
Channel 1 = 000 to 015			
2	Dimmer	000-255	Master Dimmer (0-100%)
3	Strobe	000-255	Strobe Speed (slow to fast)
4	Red 1	000-255	Dimmer Projector 1 (0-100%)
5	Green 1	000-255	Dimmer Projector 1 (0-100%)
6	Blue 1	000-255	Dimmer Projector 1 (0-100%)
7	Red 2	000-255	Dimmer Projector 2 (0-100%)
8	Green 2	000-255	Dimmer Projector 2 (0-100%)
9	Blue 2	000-255	Dimmer Projector 2 (0-100%)
10	Red 3	000-255	Dimmer Projector 3 (0-100%)
11	Green 3	000-255	Dimmer Projector 3 (0-100%)
12	Blue 3	000-255	Dimmer Projector 3 (0-100%)
13	Red 4	000-255	Dimmer Projector 4 (0-100%)
14	Green 4	000-255	Dimmer Projector 4 (0-100%)
15	Blue 4	000-255	Dimmer Projector 4 (0-100%)
16	Extra Power output 1	000-127	Power OFF
		128-255	Power ON
17	Extra Power output 2	000-127	Power OFF
		128-255	Power ON
Channel 1 = 016 to 135			
2	Dimmer	000-255	Master Dimmer (0-100%)
3	Strobe	000-255	Strobe Speed (slow to fast)
4 to 15	-	-	Not Used
16	Extra Power output 1	000-127	Power OFF
		128-255	Power ON
17	Extra Power output 2	000-127	Power OFF
		128-255	Power ON
Channel 1 = 136 to 223			
2	Speed	000-255	Effect Speed (from slow to fast)
3	Strobe	000-255	Strobe Speed (slow to fast)
4 to 15	-	-	Not Used
16	Extra Power output 1	000-127	Power OFF
		128-255	Power ON
17	Extra Power output 2	000-127	Power OFF
		128-255	Power ON
Channel 1 = 224 to 239			
2	Speed	000-255	Effect Speed (from slow to fast)
3	Strobe	000-255	Strobe Speed (slow to fast)
4	Effect color 1	000-255	Select one of the 8 colors
5	Effect color 2	000-255	Select one of the 8 colors
6 to 15	-	-	Not Used
16	Extra Power output 1	000-127	Power OFF
		128-255	Power ON

17	Extra Power output 2	000-127	Power OFF
		128-255	Power ON
Channel 1 = 240 to 255			
2	Sound	000-255	Sensitivity (from low to high)
3 to 15	-	-	Not Used
16	Extra Power output 1	000-127	Power OFF
		128-255	Power ON
17	Extra Power output 2	000-127	Power OFF
		128-255	Power ON

DMX Chart for the 18 channel DMX-Mode

To be selected while using the **LEDCON-02 Mk2** controller, see previous pages for more information.

Channel:		Value:	Function:
1	Red (projector 1)	000-255	Dimmer (0-100%)
2	Green (projector 1)	000-255	Dimmer (0-100%)
3	Blue (projector 1)	000-255	Dimmer (0-100%)
4	Dim Strobe Music Mode (projector 1)	000-007	Blackout
		008-190	Master Dimmer (0-100%)
		191-200	Automatic Sound controlled Mode
		201-247	Strobe speed (slow to fast)
		248-255	Maximum Master dimmer level
5	Red (projector 2)	000-255	Dimmer (0-100%)
6	Green (projector 2)	000-255	Dimmer (0-100%)
7	Blue (projector 2)	000-255	Dimmer (0-100%)
8	Dim Strobe Music Mode (projector 2)	000-007	Blackout
		008-190	Master Dimmer (0-100%)
		191-200	Automatic Sound controlled Mode
		201-247	Strobe speed (slow to fast)
		248-255	Maximum Master dimmer level
9	Red (projector 3)	000-255	Dimmer (0-100%)
10	Green (projector 3)	000-255	Dimmer (0-100%)
11	Blue (projector 3)	000-255	Dimmer (0-100%)
12	Dim Strobe Music Mode (projector 3)	000-007	Blackout
		008-190	Master Dimmer (0-100%)
		191-200	Automatic Sound controlled Mode
		201-247	Strobe speed (slow to fast)
		248-255	Maximum Master dimmer level
13	Red (projector 4)	000-255	Dimmer (0-100%)
14	Green (projector 4)	000-255	Dimmer (0-100%)
15	Blue (projector 4)	000-255	Dimmer (0-100%)
16	Dim Strobe Music Mode (projector 4)	000-007	Blackout
		008-190	Master Dimmer (0-100%)
		191-200	Automatic Sound controlled Mode
		201-247	Strobe speed (slow to fast)
		248-255	Maximum Master dimmer level
17	Extra Power output 1	000-127	Power OFF
		128-255	Power ON
18	Extra Power output 2	000-127	Power OFF
		128-255	Power ON

DMX Chart for the special LC-XL DMX-Mode
This is a compatibility mode for the JB SYSTEMS **LEDCON-XL CONTROLLER**

Channel:		Value:	Function:
1	Red (projector 1)	000-255	Dimmer (0-100%)
2	Green (projector 1)	000-255	Dimmer (0-100%)
3	Blue (projector 1)	000-255	Dimmer (0-100%)
4 to 8	NOT USED		No function
9	Red (projector 2)	000-255	Dimmer (0-100%)
10	Green (projector 2)	000-255	Dimmer (0-100%)
11	Blue (projector 2)	000-255	Dimmer (0-100%)
12 to 16	NOT USED		No function
17	Red (projector 3)	000-255	Dimmer (0-100%)
18	Green (projector 3)	000-255	Dimmer (0-100%)
19	Blue (projector 3)	000-255	Dimmer (0-100%)
20 to 24	NOT USED		No function
25	Red (projector 4)	000-255	Dimmer (0-100%)
26	Green (projector 4)	000-255	Dimmer (0-100%)
27	Blue (projector 4)	000-255	Dimmer (0-100%)

MAINTENANCE

- Make sure the area below the installation place is free from unwanted persons during servicing.
- Switch off the unit, unplug the mains cable and wait until the unit has been cooled down.

During inspection the following points should be checked:

- All screws used for installing the device and any of its parts should be tightly fastened and may not be corroded.
- Housings, fixations and installations spots (ceiling, truss, suspensions) should be totally free from any deformation.
- When an optical lens is visibly damaged due to cracks or deep scratches, it must be replaced.
- The mains cables must be in impeccable condition and should be replaced immediately when even a small problem is detected.
- In order to protect the device from overheat the cooling fans (if any) and ventilation openings should be cleaned monthly.
- The interior of the device should be cleaned annually using a vacuum cleaner or air-jet.
- The cleaning of internal and external optical lenses and/or mirrors must be carried out periodically to optimize light output. Cleaning frequency depends on the environment in which the fixture operates: damp, smoky or particularly dirty surroundings can cause greater accumulation of dirt on the unit's optics.
    - Clean with a soft cloth using normal glass cleaning products.
    - Always dry the parts carefully.

Attention: We strongly recommend internal cleaning to be carried out by qualified personnel!

SPECIFICATIONS

Mains Input:	100-250Vac, 50/60Hz
Power consumption:	120 Watts
Fuse:	250V 2A slow blow (20mm glass)
Extra Mains outputs:	250V 3A max. / output
Sound Control:	Internal microphone
DMX connections:	XLR 3pin
DMX modes:	3, 5, 6, 8, 12, 17, 18 Channel and LC-XL mode
LED Source:	4x 36W TRI COB LED
Beam angle with lens:	15°
Beam angle without lens:	100°
Size:	1000x82x320mm
Weight of the 4bar (without case):	7.6 kg

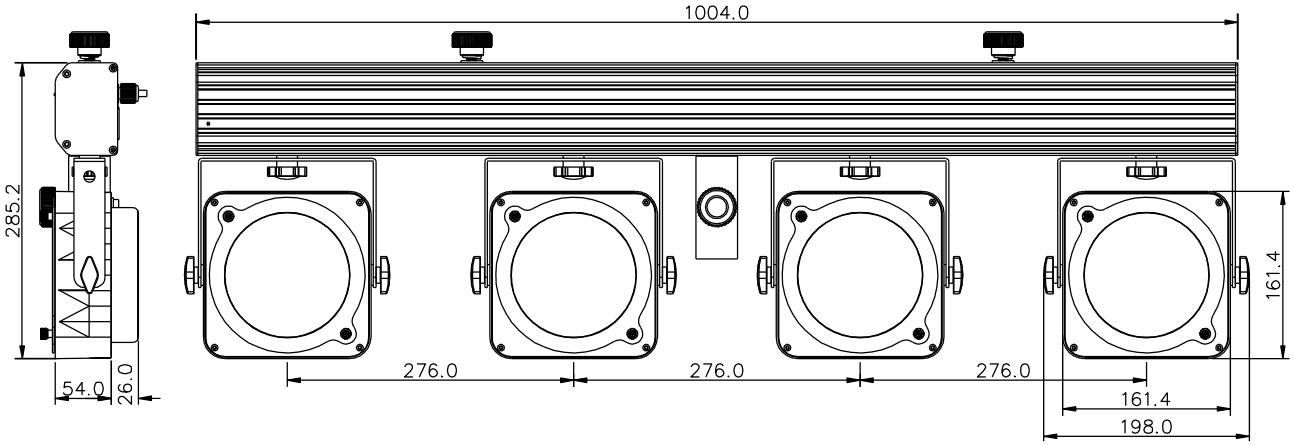

Every information is subject to change without prior notice
You can download the latest version of this user manual on our website: www.jb-systems.eu

JBSYSTEMS

MAILING LIST

EN: Subscribe today to our mailing list for the latest product news!
FR: Inscrivez-vous à notre liste de distribution si vous souhaitez suivre l'actualité de nos produits!
NL: Abonneer je vandaag nog op onze mailinglijst en ontvang ons laatste product nieuws!
DE: Abonnieren Sie unseren Newsletter und erhalten Sie aktuelle Produktinformationen!
ES: Suscríbete hoy a nuestra lista de correo para recibir las últimas noticias!

WWW.JB-SYSTEMS.EU

Copyright © 2017 by BEGLEC NV
't Hofveld 2C ~ B1702 Groot-Bijgaarden ~ Belgium
Reproduction or publication of the content in any manner, without express permission of the publisher, is prohibited.