ASSEMBLY INSTRUCTION

NP*RX | 1/4" Professional Right-Angle Phone Plug

Ⓐ

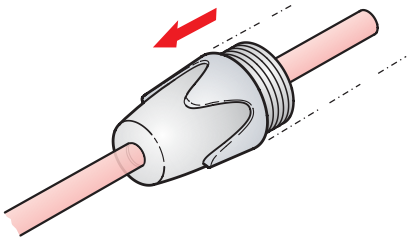

Ⓑ

NP2RX

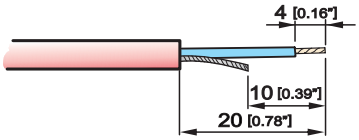

NP3RX

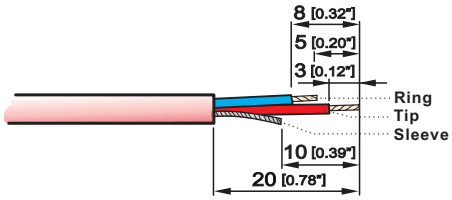

Ⓐ **Slide the boot onto the cable.**

Ⓑ **Prepare cable as shown.**

Ⓒ **Solder the wire ends in the order Sleeve, Ring and Tip.**

Ⓓ **Position the chuck onto the cable and align chuck with plugfinger.**

Attention:
If using a cable with O.D. > 5.50 mm [0.216"] break off marked part of the chuck.

Ⓔ **Push the cover to the stop position on the shell.**

Ⓕ **Finish the installation by tighten the bushing onto the connector.**

Ⓒ

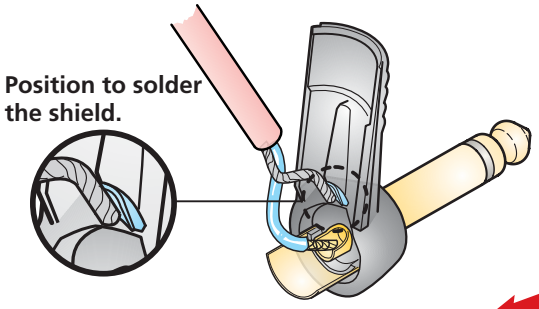

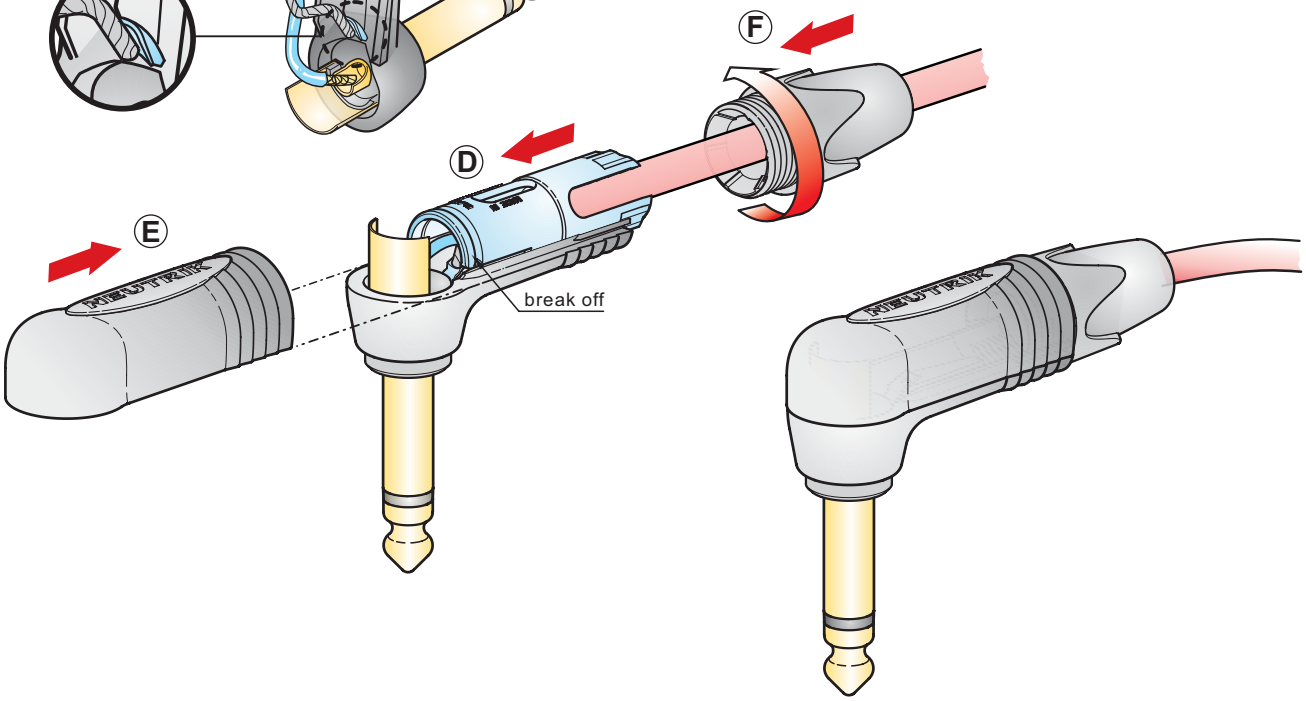

NEUTRIK AG	LI	T: +423 / 237 24 24	F: +423/232 53 93	NEUTRIK France	FR	T: +33 1/4131 6750	F: +33 1/4131 0511
NEUTRIK USA Inc.	USA	T: +1 704 / 972 3050	F: +1 704/438 9202	NEUTRIK Tokyo Ltd.	JP	T: +81 3/3663 4733	F: +81 3/3663 4796
NEUTRIK (UK) Ltd.	UK	T: +44 1983 / 811 441	F: +44 1983/811 439	NEUTRIK Hong Kong Ltd.	HK	T: +852/2687 6055	F: +852/2687 6052
NEUTRIK Vertriebs GmbH	DE / NL / AT/DK	T: +49 8131 / 280 890	F: +49 8131/280 830	NEUTRIK India Pvt. Ltd.	IND	T: +91/982 05 43 424	F: +91/22 26163 540

Draft. Nr.: BDA 180 | Update: 24.07.2015 |

Data subject to change without prior notice. ©2015 NEUTRIK® . ALL RIGHTS RESERVED. NEUTRIK® are registered trademark.

www.neutrik.com