ENGLISH

MAGIC FX®

USER AND INSTALLATION MANUAL

FLAMEBLAZER® 5-WAY

CE

FLAME FX

PART02556 rev 01-00

DISCLAIMER

⚠ WARNING	Read this manual carefully before installing and/or using this product. Failure to read the manual and to follow the printed instructions may lead to personal injury and/or damage to the product.

© 2025 MAGICFX®

All rights reserved.

Nothing from this publication may be copied, reproduced and/or published by means of printing, photocopying or by any other means, without the prior written approval of MAGIC FX.

MAGIC FX reserves the right to modify specifications stated in this manual.

TRADEMARKS

Any brand names mentioned in this manual are registered trademarks of their respective owners.

LIABILITY

MAGIC FX accepts no liability for claims from third parties arising from unauthorised use, use other than that stated in this manual, and use other than in accordance with the General Conditions registered at the Chamber of Commerce.

We further refer to the General Conditions. These are available on request, free of charge.

Although considerable care has been taken to ensure a correct and comprehensive description of all relevant components, the manual may nonetheless contain errors and inaccuracies. Always check the latest version of the manual.

Should you detect any errors or inaccuracies in the manual, we would be grateful if you would inform us. This helps us to further improve our documentation.

TABLE OF CONTENTS

Introduction		4
Target group		4
Other documentation		4
Language		5
Abbreviations		5
Revision table		5
1.	**Description**	**6**
1.1.	Main parts	7
1.2.	FLAMEBLAZER fuel	8
1.3.	Technical data	8
1.4.	Product identification	9
1.5.	Accessories	9
1.6.	ARM Control	10
1.7.	ARM override key	11
1.8.	DMX control	12
1.9.	Display panel	13
1.10.	RDM capability	16
2.	**Safety**	**18**
2.1.	General safety rules	18
2.2.	Rigging	18
2.3.	Noise levels	18
2.4.	Safety symbols	19
2.5.	Safety warnings	19
2.6.	Risk zones	20
3.	**Installation and use**	**24**
3.1.	Install the machine	24
3.2.	Choose the flame height	25
3.3.	(Re)fill the fuel	27
3.4.	Mount on a truss	30
3.5.	Connect the machine	32
3.6.	Using the ARM override key switch	34
3.7.	Fire with DMX	34
3.8.	Use the emergency stop	35
4.	**Troubleshooting**	**36**
5.	**Maintenance**	**36**
6.	**Correct disposal**	**38**
7.	**EC Declaration of Conformity**	**39**

INTRODUCTION

Congratulations! You have bought a great new product from MAGIC FX.

This manual contains all information required for the intended use of the equipment. Deviation from the described intended use can result in a hazardous situation and/or property damage.

This manual includes notes and warnings on safe operation of the equipment. These notes and warnings are accompanied by the following icons. Read them attentively!

⚠ DANGER	Indicates a hazardous situation that, if not avoided, will result in death or serious injury. This signal word is to be limited to the most extreme situations.
⚠ WARNING	Indicates a hazardous situation that, if not avoided, could result in death or serious injury.
⚠ CAUTION	Indicates a hazardous situation that, if not avoided, could result in minor or moderate injury.
NOTICE	Indicates information considered important, but not hazard-related (e.g. messages relating to property damage).

TARGET GROUP

This manual is targeted at authorised personnel in the event industry that install and operate the FLAMEBLAZER 5-WAY and the required ARM SYSTEM.

Authorised personnel are those who:

- Are appointed by their supervisor to install and/or operate the FLAMEBLAZER 5-WAY and the related ARM SYSTEM at the event.
- Are trained in recognizing and avoiding hazards related to SFX applications at events.
- Are familiar with the safety instructions of each involved ARM SYSTEM component.
- Are familiar with and abide by the applicable local, national and international laws and regulations.

OTHER DOCUMENTATION

Document	Document number
ARM SYSTEM Configuration Manual	PART02323
ARM CONTROLLER User and Installation Manual	PART01882

Other related documentation

LANGUAGE

This document contains the original instructions in English. In case you require other languages please contact MAGIC FX.

ABBREVIATIONS

Abbreviation	Description
SFX	Special effects
DMX	Digital Multiplex
RDM	Remote Device Management
ARM SYSTEM	MAGICFX® SFX SAFETY ARM SYSTEM
ARM CONTROLLER	MAGICFX® SFX SAFETY ARM CONTROLLER
E-STOP	MAGICFX® SFX SAFETY E-STOP
BEACON	MAGICFX® SFX SAFETY BEACON
TERMINATOR	MAGICFX® SFX SAFETY TERMINATOR
FLAMEBLAZER 5-WAY	MAGICFX® FLAMEBLAZER® 5-WAY

Abbreviations

REVISION TABLE

Doc nr	Revision	Date	Description	Author	Approved
PART02556	01-00	22-05-2025	Initial release	MB	GM

1. DESCRIPTION

The FLAMEBLAZER 5-WAY is a special effects machine for controlled emission of flame jets into the air.

The FLAMEBLAZER 5-WAY has 5 output nozzles, differing in direction in steps of 18 degrees. From left to right: 36 - 18 - 0 - 18 - 36.

The nozzles can not be activated simultaneously. Only one nozzle can emit flames at a time.

The machine uses specific flammable fuels, pressurised through a single outlet across spark ignition probes to generate the flame jet. An integrated electric pump draws the fuel from the 10 L can and generates the firing pressure.

There are three nozzles available with the FLAMEBLAZER 5-WAY which are interchangeable, allowing the user to choose a small, medium or large flame. Based on zero wind the sizes are as follows:

- S nozzle, up to 6 m (accessory);
- M nozzle, up to 8 m (accessory);
- L nozzle, up to 10 m (included);

A specific nozzle exchange tool is available to change between the available nozzles (SFX1404).

The FLAMEBLAZER 5-WAY is operated with DMX and RDM. The FLAMEBLAZER 5-WAY can be operated in sequence with multiple machines. Furthermore, the FLAMEBLAZER 5-WAY is configured for safety control with an ARM SYSTEM.

1.1. MAIN PARTS

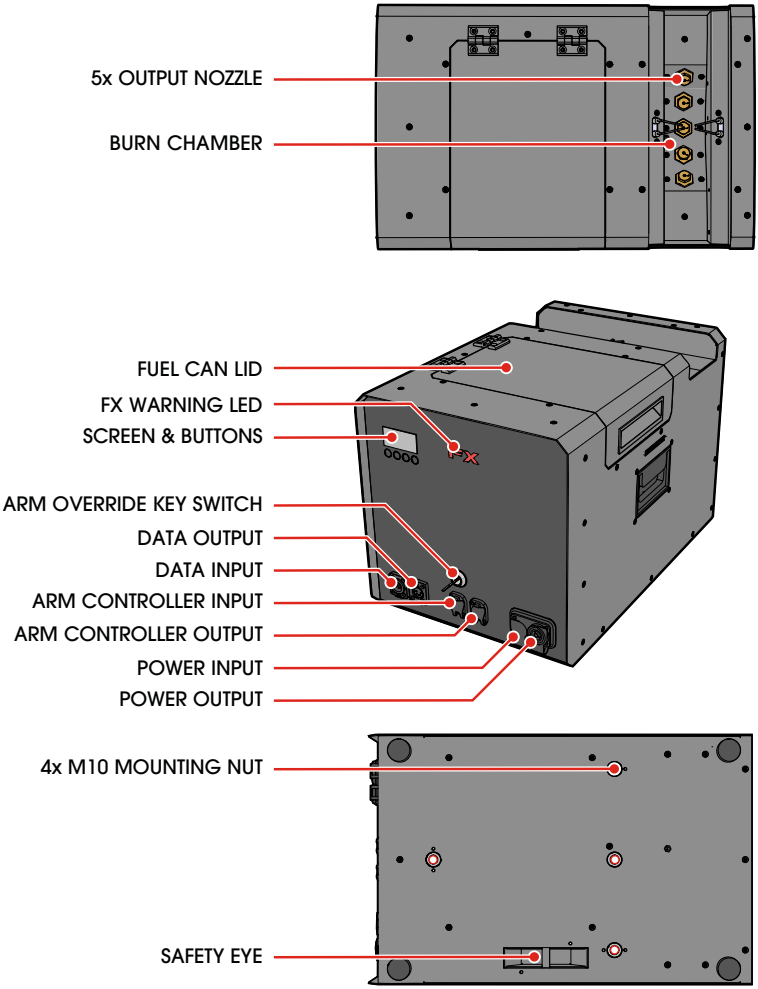

Main parts

1.2. FLAMEBLAZER FUEL

The FLAMEBLAZER 5-WAY uses two types of fuel to create the effect. The fuel is loaded into an 10 L can located in the machine.

⚠ CAUTION	Fuels are highly flammable and must be handled with caution and in accordance with local health and safety regulations. Always follow the safety instructions from the fuel packaging when handling and working with the fuel.
⚠ CAUTION	Only use approved fuels: Isopropanol, ISOPAR G, H & L. The use of other fuels or water may degrade the performance of the machine or cause internal damage.
⚠ CAUTION	Do not use any (coloring) additives in the fuel.
⚠ CAUTION	Do not use water in the machine.
⚠ CAUTION	Do not reuse or remix previously used fuels, as this increases the risk of contamination and may damage internal components.

1.3. TECHNICAL DATA

Product	Product Name	FLAMEBLAZER 5-WAY	
	Product Code	MFX1402	
	Product Type	FLAME FX	
Main Dimensions	Length	511 mm	20.1 in
	Width	330 mm	13 in
	Height	348 mm	13.7 in
Weight	Empty Weight	31 kg	68.3 lb.
Package	Length	590 mm	23.2 in
	Width	390 mm	15.4 in
	Height	450 mm	17.7 in
	Packaged Weight	32.2 kg	71 lb.
Environment	Minimum Temperature	- 10 °C	14 °F
	Maximum Temperature	50 °C	122 °F
	Humidity (Relative)	20 to 90 % (non-condensing)	

Technical data

Electrical	Voltage Input	220 - 250 VAC
	Voltage Frequency	50 - 60 Hz
	Power Consumption	395 W
	Power Connector	Neutrik® powerCON TRUE1 (in&out)
Controlling	Control Options	DMX
	Control Protocols	DMX512-A (ANSI E1.11) RDM (ANSI E1.20)
	Control Connectors	Neutrik® 5-pole male/ female XLR
Safety controlling	ARM Connector	Neutrik® etherCON RJ45 (in&out)
Configuring	Configure Options	On Device RDM
Usage	Consumable(s)	Isopropanol ISOPAR G, H & L
	Consumable Consumption	S nozzle: ≈ 1.4 L/min M nozzle: ≈ 1.6 L/min L nozzle: ≈ 3.5 L/min

Technical data

1.4. PRODUCT IDENTIFICATION

Type plate

1.5. ACCESSORIES

Code	Product	Included
SFX1401	MAGICFX® FLAMEBLAZER Nozzle S	
SFX1402	MAGICFX® FLAMEBLAZER Nozzle M	
SFX1403	MAGICFX® FLAMEBLAZER Nozzle L	5x

Accessories

Code	Product	Included
SFX1408	Blanking nozzle	4x
SFX1404	FLAMEBLAZER Nozzle exchange tool	
MFX0313	Schuko to Neutrik® powerCON TRUE1 cable - 1.5 m	
MFX3106	Doughty Half Coupler (100 kg) M10	
MFX3110	Safety Steel	
PART02566	Empty ADR Can 10 L (w/out Cap)	1x
PART90213	FLAMEBLAZER 5-WAY CUSTOM CAN CAP 10L	1x
MFX3089	MAGICFX® Flame Fluid Isopar 10L	
MFX3092	MAGICFX® Flame Fluid IPA 10L	

Accessories

Please contact MAGIC FX for additional possibilities.

For information about the accessories of the ARM CONTROLLER (MFX3220), refer to the ARM CONTROLLER User and Installation Manual (PART01882).

1.6. ARM CONTROL

The FLAMEBLAZER 5-WAY is designed to operate safely using the MAGICFX® ARM SYSTEM, which provides an interlocked safety control system. The system is normally armed and disarmed via the ARM CONTROLLER, which includes a key switch, emergency stop (E-STOP), and a reset button. The safety signal is transmitted via EtherCON cabling between the ARM CONTROLLER and connected machines.

The ARM SYSTEM ensures that in the event of a signal failure, the internal relief valve automatically opens, immediately depressurising the system and preventing unintended flame output. This design minimises the risk of harm or damage due to unexpected activation.

The use of the ARM CONTROLLER is strongly advised. Only in specific applications can the ARM system be overridden and the unit controlled via DMX only. In such cases, the machine must be used in conjunction with other appropriate and approved safety systems.

An override key switch is located on the FLAMEBLAZER 5-WAY, allowing the machine to operate without an ARM CONTROLLER connected. This function is intended for use only when alternative safety provisions are in place. When the override is active (key set to OFF), the FX LED illuminates red to indicate the system is armed and ready for operation via DMX.

For more information about the ARM SYSTEM and to learn how to configure a complete safety system, refer to the ARM SYSTEM Configuration Manual (PART02323).

1.7. ARM OVERRIDE KEY

⚠ WARNING	Only override the ARM system when using other approved safety systems.
⚠ WARNING	Do not leave the key in the device by default. Always remove the key after setting the desired position to prevent unauthorized use or accidental activation.
NOTICE	When the SFX Safety Arm System is turned off while an ARM controller is connected, the display will show error 131 (Misconfiguration ARM system). This prevents the false assumption that the ARM system is active, while it is in fact disabled due to the safety override.

If no ARM CONTROLLER is connected, the safety system can be manually overridden using the key switch located on the STADIUMSHOT III. Turning the key to the **OFF** position disables the ARM input and arms the machine for operation via DMX. The FX LED illuminates red, indicating the system is armed and active.

When the key is set to **ON**, the system requires a valid ARM signal from an ARM CONTROLLER in order to operate. Without this signal, the machine remains in a safe, disarmed state.

The machine is labelled accordingly to indicate the override status:

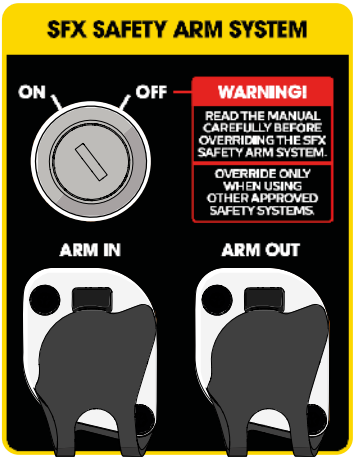

Key position	Result
ON	The system needs to be armed by an ARM CONTROLLER.
OFF	ARM system disabled: override active and the FX LED is red indicating the system is armed.

1.8. DMX CONTROL

The FLAMEBLAZER 5-WAY is controlled with 1 enable address and 5 operational addresses:

DMX Address	Address range	Control
Enable address	1-512	Device enable / disable
Start address	1-508	Effect trigger left nozzle
Start address + 1	2-509	Effect trigger middle left nozzle
Start address + 2	3-510	Effect trigger middle nozzle
Start address + 3	4-511	Effect trigger middle right nozzle
Start address + 4	5-512	Effect trigger right nozzle

DMX Addresses

The enable address cannot be the same as the operational address. Operating of these addresses results in the following:

DMX Address	DMX Value (decimal)		Result
Enable address	0	24	Device disabled
	25	64	Reset alarm codes
	65	99	Device pre-enabled (firing disabled)
	100	154	Device enabled
	155	255	Device disabled
Start address (effect trigger)	0	199	No output
	200	255	Output effect

Operation of the DMX addresses

NOTICE	The maximum continuous duration of the effect per nozzle is 5 seconds. After this period the effect on that nozzle will stop automatically. To start the effect again you must disable and re-enable the **Effect trigger**. There is no limit on the total effect time as long as you switch nozzles within 5 seconds.
NOTICE	Always plug in a DMX Terminator into the DMX output of the final unit in the control sequence. Using a DMX Terminator improves signal reliability.

1.9. DISPLAY PANEL

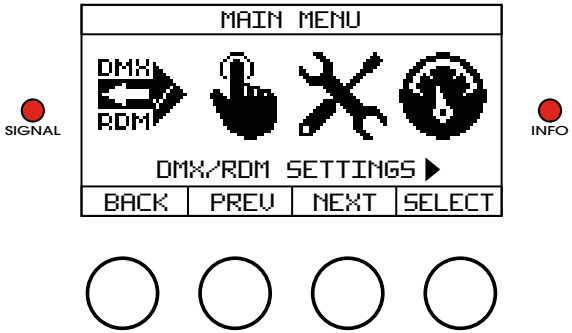

Display panel

The display panel is located on the backside of the FLAMEBLAZER 5-WAY. Check the following menu structure for all options in the menu. Use the buttons for navigation and selection. The signal LED blinks red when DMX signal is active. The info LED continuously lights red when an error is present.

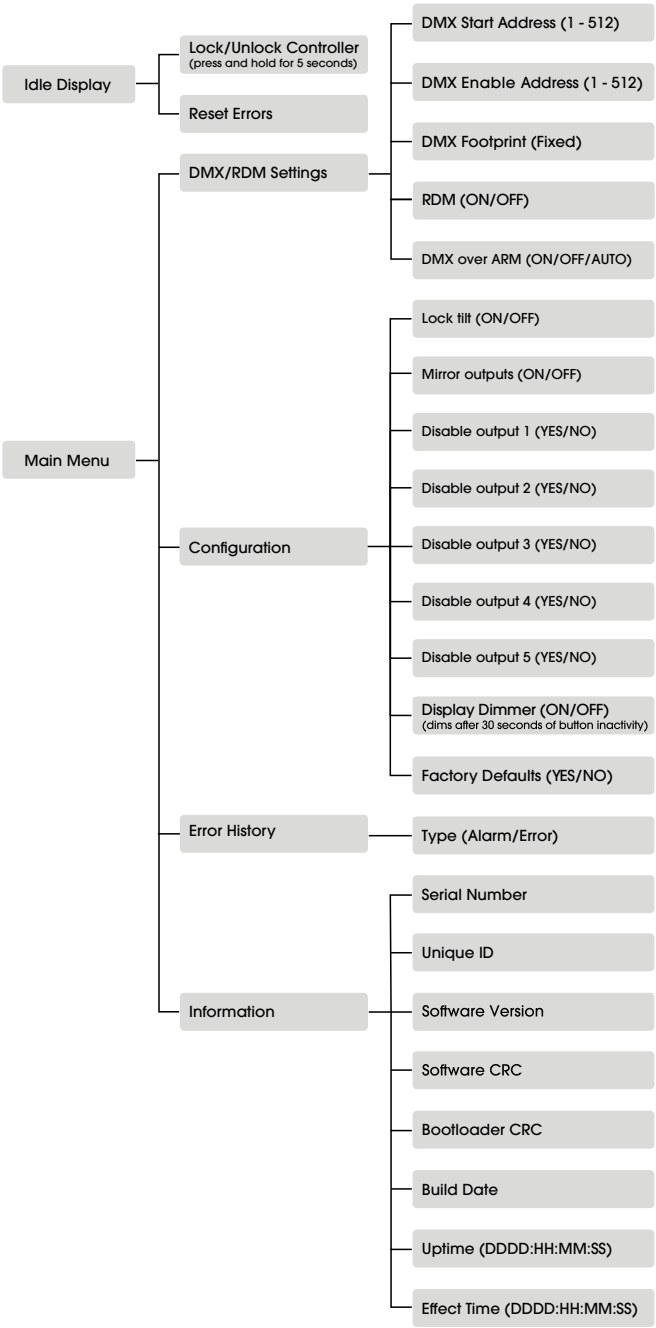

Menu structure

Menu function	Explanation
Lock/Unlock Controller	Holding the Lock button for more than 5 seconds will “lock” the display functions. Meaning buttons will not respond. This to avoid accidental change of parameters via display. To unlock, hold the Unlock button for more than 5 seconds. In case system is armed display is locked.
Reset Errors	In case there is a locking error present, this button will reset the appliance. If the fault does not persist, the locking error will not reappear.
DMX Start Address (1-512)	Setting the DMX Start Address.
DMX Enable Address (1-512)	Setting the DMX Enable Address.
DMX Footprint	This parameter indicates the DMX footprint, in other words the amount of sequential channels used by the appliance. This does not include the enable channel.
RDM (On/Off)	Use this function to turn on/off the RDM functionality.
DMX over ARM (On/Off/Auto)	If a combined DMX and ARM signal is used, set this option to ON. If the DMX signal runs separately, set this option to OFF. Make sure the DMX over ARM settings match your wiring setup.
Lock tilt (On/Off)	Use the lock tilt to lock the angle position. The display will show an error when the head tilts more than 5 degrees from the locked position. The tilt can not be locked if the head is outside its maximum tilt angles. The error is cleared when the head repositions to within the range. When this function is OFF, the error will only display when the tilt is outside given bounds.
Mirror outputs (On/Off)	By enabling this setting, the DMX channels for the outputs are mirrorred. This means output 1 is controlled by channel 5, output 2 by channel 4, output 3 by channel 3, output 4 by channel 2, and output 5 by channel 1.
Disable output 1-5 (Yes/No)	The outputs can be disabled from this menu. A trigger on that DMX channel will not result in firing the output. Also insert a blanking nozzle in the corresponding output.
Display Dimmer (On/Off)	Turn display dimmer on or off. If turned on, the display is dimmed automatically 30 seconds after the last button push.
Factory Defaults (Yes/No)	Restores the appliance factory default settings.

Menu functions

Menu function	Explanation
Type (Alarm/Error)	Toggle between the occurred locking error (Alarm) list, and blocking error (Error) list. Locking errors need intervention by user, although they are “auto-reset” 3 times before the appliance remains in error until reset by user. Blocking errors clear when the triggering fault disappears. 16 locked, and 16 blocked errors are logged. Top of the list shows the last occurring error.
Serial Number (DDDDD)	Appliance serial number as also printed on the appliance label.
Unique ID (HHHHHHHHHHHH)	UID number as the appliance appears in the RDM device list after running discovery.
Software Version	Installed software version.
Software CRC	CRC of the functional software.
Bootloader CRC	CRC of the bootloader software.
Build Date	Release date of functional software.
Uptime (DDDD:HH:MM:SS)	Time counter which indicates how long the appliance has been powered in total.
Effect Time (DDDD:HH:MM:SS)	Time counter which indicates how long the effect has been on in total.

Menu functions

⚠ WARNING	Always insert blanking nozzles in unused outputs. Disabling the output in the software is not sufficient for your safety.

1.10. RDM CAPABILITY

Remote Device Management Protocol (RDM) is an enhancement of the DMX512 communication protocol. RDM can be used for configuration and status monitoring while DMX512 takes care of the default controlling.

For RDM you will need an RDM compatible controller.

The following RDM parameters are supported by the FLAMEBLAZER 5-WAY.

Parameter ID	Discovery	GET	SET
DISC_UNIQUE_BRANCH	X		
DISC_MUTE	X		
DISC_UN_MUTE	X		
DEVICE_INFO		X	
SUPPORTED_PARAMETERS		X	
SOFTWARE_VERSION_LABEL		X	
DEVICE_MODEL_DESCRIPTION		X	
MANUFACTURER_LABEL		X	
SLOT_DESCRIPTION		X	
DMX_PERSONALITY_DESCRIPTION		X	
SENSOR_DEFINITION		X	
SENSOR_VALUE		X	
DMX_START_ADDRESS		X	X
IDENTIFY_DEVICE		X	X
DEVICE_LABEL		X	X
FACTORY_DEFAULTS		X	X
DMX_PERSONALITY		X	X
RDM_PID_ENABLE_ADDR		X	X
RDM_PID_MIRROR_OUTPUTS		X	X
RESET_DEVICE			X

RDM parameters

RDM parameters are subject of change due to software updates. Contact MAGIC FX for the latest information and updates.

The following sensors are available through RDM:

Sensor	Description
Pressure	Pressure in kPa
Error code	0 = no error. All other numbers indicate an error.

2. SAFETY

The FLAMEBLAZER 5-WAY has been designed and constructed in such a manner that it can be used safely. This applies to the use, the circumstances and the regulations as described in this documentation. Reading this documentation and following the instructions are therefore necessary for everyone who is authorised to work with the FLAMEBLAZER 5-WAY.

The FLAMEBLAZER 5-WAY must be used in surroundings that:

- Have a reasonably stable temperature of between -10 and 50 °C.
- Have a relative humidity degree between 20 % and 90 % (non condensing).
- Are free of dust, corrosive gases and high concentrations of organic vapours.

2.1. GENERAL SAFETY RULES

- Only authorised persons may work with the FLAMEBLAZER 5-WAY.
- Do not use the FLAMEBLAZER 5-WAY if there are people or animals in the direct output.
- Make sure that children, unauthorised people and animals do not obtain access to the FLAMEBLAZER 5-WAY.
- Do not use consumable fuel outside of the design intent as may lead to damage to the hardware, or hazardous situation to property and people;
- Do not use incorrect nozzles as this may lead to damage to property or injury to people. (Product supplied with L nozzle);
- Do not connect more units to a single electrical circuit than the installed fuse is able to handle. (Calculate the summed load with the electrical data from Chapter 1).
- Do not remove or bypass any safeguards and safety symbols.
- All required safety devices must be in good condition and function properly.
- Ensure sufficient lighting of the surroundings.
- Keep the workplace clean.

2.2. RIGGING

Please follow the European and/or national guidelines for safe rigging and trussing.

2.3. NOISE LEVELS

The measured maximum noise levels of the product is 79 dB(A) at 3 m distance away. Please follow the European and national guidelines regarding hearing protection.

2.4. SAFETY SYMBOLS

Symbol	Meaning	Position
	Read the manual carefully before use!	Front of the machine.
	Wear certified safety goggles!	In the manual.
	Warning: Flammable Fluid. Inside the 100 L tank, the internal machine pipework and projected from the flame outlet.	Front of the machine.
	Warning: High Pressure. High Pressure liquid inside the internal machine pipework and projected from the flame outlet.	Front of the machine.
	Warning: Hot Surface! Do not touch.	Top of the machine, near the flame outlet.
	Warning: High Voltage. The ignition probes in the flame outlet chamber during operation.	Top of the machine, near the flame outlet.

Safety symbols

2.5. SAFETY WARNINGS

⚠ WARNING	Make sure that you are familiar with and comply with the instructions from the user and installation manual of each applied ARM SYSTEM component.
⚠ WARNING	Using a damaged or an improperly installed machine can lead to death, serious injury or property damage. Always inspect the machine thoroughly before operation.
⚠ WARNING	Eye contact with fuel under pressure and burning fuel from the machine can lead to serious eye injury. Always wear safety goggles when you enter the safety zone.

⚠ WARNING	The FLAMEBLAZER 5-WAY works with pressurized fuel. Make sure that the fuel pressure is fully dissipated before connecting or disconnecting hoses. Always wear safety goggles and suitable gloves when you connect or disconnect hoses.
⚠ WARNING	Fuels are highly flammable and must be handled with caution and in accordance with local health and safety regulations. Always follow the safety instructions from the fuel packaging when handling and working with the fuel.
⚠ WARNING	Never allow smoking, flames, or other sources of ignition near the FLAMEBLAZER 5-WAY (even when the system is turned off or in transit).
⚠ WARNING	Missing or obscured safety symbols on the machine can lead to death or serious injury. Make sure all safety symbols are correctly in place, see section 2.4.
⚠ WARNING	Make sure the probe spacing is correct and corresponds with the illustration in section 5.
⚠ WARNING	Check the machine for debris and corrosion before use. Clean or remove any residue in accordance with chapter 5.
⚠ CAUTION	The FLAMEBLAZER 5-WAY should not be used in winds exceeding 32 km/h or 20 mph.
⚠ CAUTION	Parts of the FLAMEBLAZER 5-WAY heat up during operation and can cause burns when touched. Do not touch any metal parts of a (recently) triggered machine.
⚠ CAUTION	Only open the enclosure access lid when the machine is not powered.
NOTICE	Always keep the machine dry and do not let excessive amounts of liquids such as rain or snow wet the machine.

2.6. RISK ZONES

NOTICE	Note that the risk zones shift accordingly when the machine is installed in a tilted position. Keep the entire zone and all areas beneath it clear from unauthorized people, animals, and flammable objects.
NOTICE	Note that the risk zones shift and increase with wind.
NOTICE	Note that overlap of risk zones in a setup with multiple machines is allowed, as long the outputs do not cross or touch.

2.6.1. DANGER ZONE

Symbol	Meaning
	Make sure **ALL** people, animals, and objects are clear of this area. Failure to do so results in death or serious injury.

DANGER

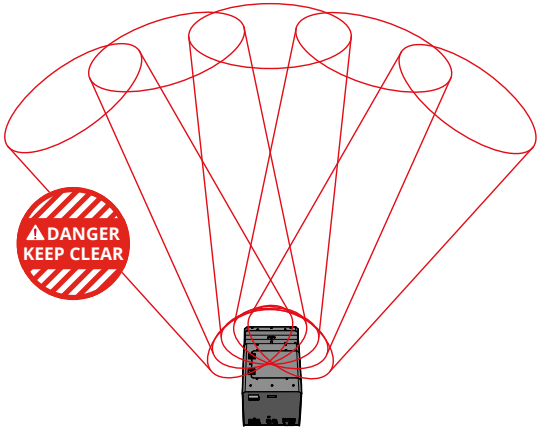

Maintain a free cylindrical output zone from each output of the FLAMEBLAZER 5-WAY.

- S nozzle: radius 1.5 m, height 9 m;
- M nozzle: radius 2.0 m, height 12 m;
- L nozzle: radius 2.5 m, height 15 m.

NOTICE

Note that the zone shifts and increases with wind. As a guidline, allow an additional 1 meter of safety distance for every 1 m/s of windspeed in the downwind direction. Risk assessments should account for local conditions, especially during outdoor use.

NOTICE

Note that if a blanking nozzle is installed and the output is disabled in the software, the direction of that nozzle does not require a safety zone.

2.6.2. HAZARDOUS ZONE

Symbol	Meaning
	Make sure unauthorized personnel and animals are clear of this area. Failure to do so could result in death or serious injury.
	Make sure there are no flammable objects or materials in this area. Failure to do so could result in death, serious injury, or damage.

⚠ WARNING	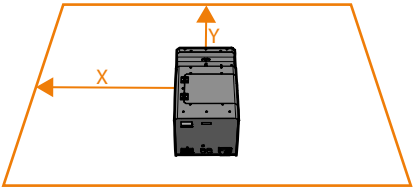 Always create a hazardous zone around the machine according to the zones indicated below. • S nozzle: a zone of 4 m (X) by 3 m (Y) • M nozzle: a zone of 4.5 m (X) by 3.5 m (Y) • L nozzle: a zone of 6 m (X) by 4.5 m (Y)
⚠ WARNING	Stop operating the system if any fire occurs outside of normal operation and/or if anything other than the emitted fuel for the SFX catches fire. Extinguish any remaining fire immediately with sand, carbon dioxide, dry powder or any other suitable extinguishing media. Do not use a water jet. Refer to the safety data sheet from the used fuel for detailed safety instructions.
⚠ WARNING	Keep the entire zone and all areas beneath it clear from unauthorized people, animals, and flammable objects.
⚠ CAUTION	Any material that blocks the output nozzle can result in injuries, fire and damage to the machine when the machine is used. Always inspect the nozzle before operating and remove any obstructing material.

NOTICE

The total size of the output effect depends on the nozzle used.

- S nozzle, up to 6 m (accessory);
- M nozzle, up to 8 m (accessory);
- L nozzle, up to 10 m (included);

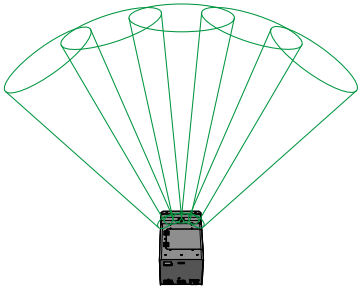

NOTICE

Make sure the FLAMEBLAZER 5-WAY is installed properly and set up in a stable position.

3. INSTALLATION AND USE

NOTICE

The FLAMEBLAZER 5-WAY will also remain functioning correctly when angled at a maximum of 45° or -45°. However the fuel can will be tipped and may cause a reduction in available fuel to the machine so level installation is preferred.

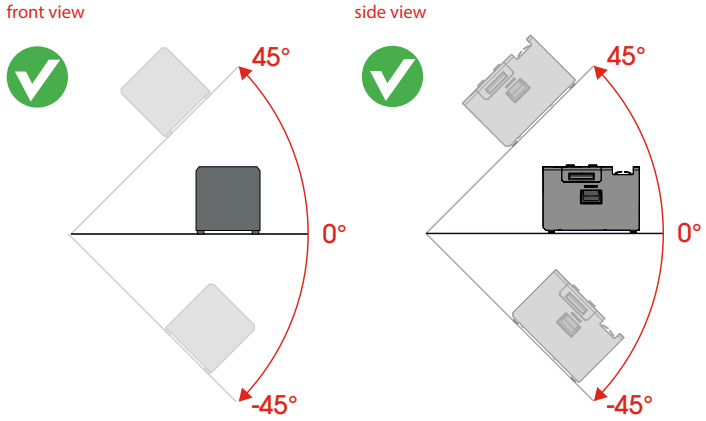

NOTICE

The angles will differ when the tilt lock function is enabled.

3.1. INSTALL THE MACHINE

1. Install the FLAMEBLAZER 5-WAY on a firm and preferably level surface.
2. Inspect the machine and remove any foreign objects and material that will block or obscure the nozzle or ignition probes of the machine during operation.
3. Take the necessary safety precautions, including:
   a. Create a safety zone around the machine in accordance with section 2.6.
   b. Insert blanking nozzles in unused outputs and disable the output in the software.

⚠ WARNING

Always insert blanking nozzles in unused outputs. Disabling the output in the software is not sufficient for your safety.

   c. Making sure that the direct output will be free from persons, animals and property.
   d. Making sure there are no objects near the machine and within the output distance that can be damaged or catch fire by the emitted heat, flame and fuel from the FLAMEBLAZER 5-WAY.

3.2. CHOOSE THE FLAME HEIGHT

⚠ WARNING	Make sure the system is disarmed when changing the nozzle.
NOTICE	The machine is supplied with an L nozzle installed which produces up to a 10 m flame.

1. Choose a flame height that is safe for the environment and rigging position of the FLAMEBLAZER 5-WAY and select the nozzle that will ensure the flame cannot exceed the physical limitations of this location.
    - S nozzle, up to 6 m (accessory);
    - M nozzle, up to 8 m (accessory);
    - L nozzle, up to 10 m (included);
    - Blanking nozzle, blocks the output completely.

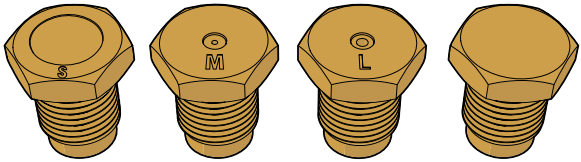

⚠ WARNING	Operating the machine with a nozzle that does not have the sufficient safety clearances is dangerous and can cause damage to property and injury to people or animals.

2. To remove the nozzle from the burn chamber place the FLAMEBLAZER Nozzle exchange tool over the hex head of the nozzle being careful not to touch or miss-align the ignition probes.

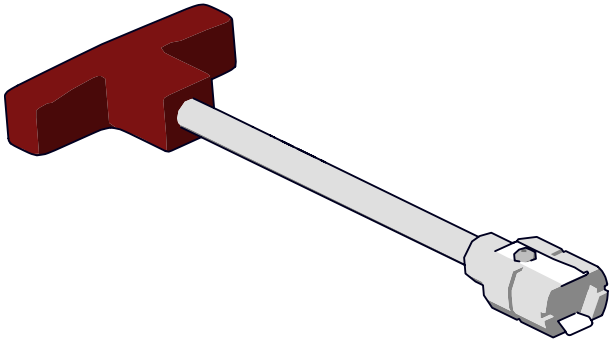

NOTICE	The machine should be on level ground and the burn chamber clean of foreign objects and materials.

3. With the FLAMEBLAZER Nozzle exchange tool held in a vertical position, continuous anti-clockwise rotation will result in the nozzle becoming free from the bulkhead.
This can be lifted out of the burn chamber and the nozzle exchange tool should retain the nozzle with the internal sprung clip.

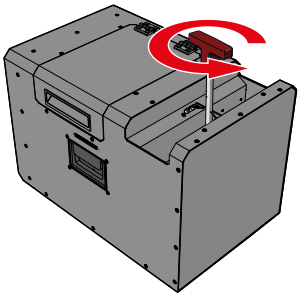

⚠ WARNING	Eye contact with fuel under pressure from the machine can lead to serious eye injury. Always wear eye protection when you change the nozzle.
⚠ CAUTION	Nozzle removal will result in the exposure of residual flammable fuel in the resulting orifice. Caution should be exercised to make sure this cannot be ignited.
NOTICE	Ensure the washer seal remains with the nozzle when it is removed and does not stay in the burn chamber potentially obstructing the new nozzle from sealing properly.

4. Replace the nozzle that is not needed for the new nozzle and locate it in the socket of the FLAMEBLAZER Nozzle exchange tool ready for installation, checking it has a washer seal (PART01192).

⚠ CAUTION	Check the nozzle for damage. If it is damaged, replace the nozzle.
⚠ CAUTION	Check the washer seal for damage. If it is damaged, replace the washer seal.

5. Carefully lower the FLAMEBLAZER Nozzle exchange tool with nozzle into the burn chamber until the nozzle locates into the bulkhead orifice. Rotate anti-clockwise until a click is heard or felt to check the threads are aligned.
Make sure the tool is held vertical, continuous clockwise rotation will tighten the nozzle into place.

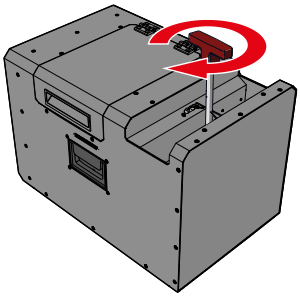

⚠ CAUTION	Check there is no foreign objects or material in the bulkhead orifice prior to inserting the nozzle as this can lead to blockages or misfires resulting in a dangerous situation.
⚠ CAUTION	Cross-threading the nozzle into the bulkhead, under tightening or not using a ring seal will cause a poor seal resulting in fuel leaks in the burn chamber.
NOTICE	The nozzle quickly goes from loose to tight as the seal meets the bulkhead and does not need to be tightened with excessive force. 12 Nm is sufficient for a good seal.

3.3. (RE)FILL THE FUEL

⚠ WARNING	Always make sure that the machine is disarmed and not enabled (FX LED indicator on the machine is dimmed) when you approach a machine.
⚠ WARNING	Eye contact with fuel under pressure and burning fuel from the machine can lead to serious eye injury. Always wear eye protection when you come near a powered machine.
⚠ CAUTION	The flame output burn chamber and enclosure heats up during operation and could cause burns when touched. Do not touch any metal parts of a (recently) triggered machine.

⚠ CAUTION When swapping the fuel can, check the filter for debris.

1. Disconnect the machine from the power supply.
2. Open the enclosure access lid.

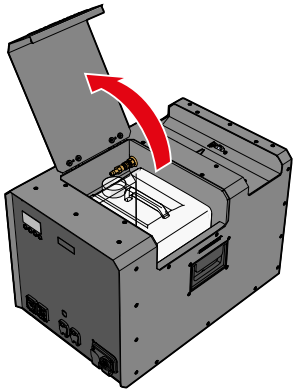

⚠ CAUTION Fuels are highly flammable and must be handled with caution and in accordance with local health and safety regulations. Always follow the safety instructions from the fuel packaging when handling and working with the fuels.

3. To remove the can from the housing pull back the sleeve of the quick release coupling to disconnect the fuel hose and remove the can from the enclosure. Once removed unscrew and disconnect the screw cap, hose and quick release coupling from the old can.

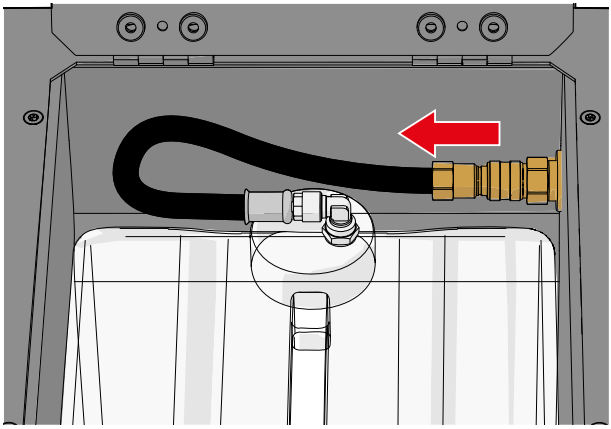

4. Insert the dip hose into the new can so that it touches the bottom and securely fit the screw cap to the can making sure it is tight and will not leak. Place the can into the housing so the cap is furthest away from the control panel.

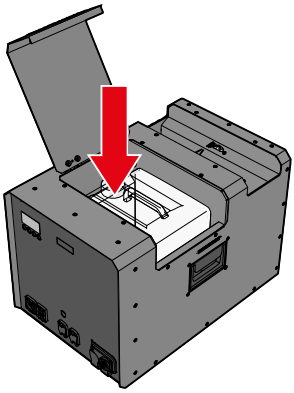

5. Check the quick connector for debris and damage. When polluted, clean the quick connector. When damaged, do not use the quick connector and replace it.
6. Push the fuel hose into the quick release coupling on the machine, checking it has engaged properly.

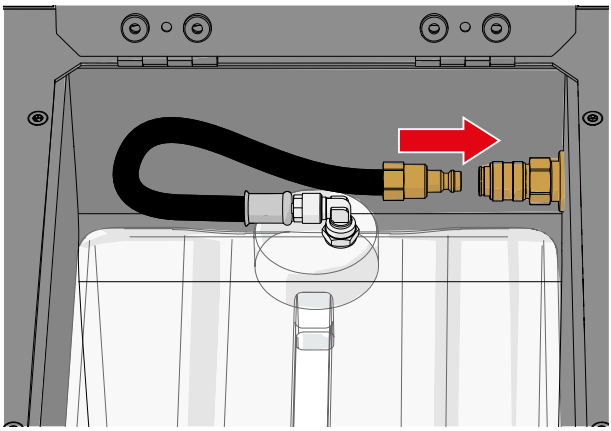

7. Close the enclosure access lid.

⚠ CAUTION	Always close the fuel enclosure lid to prevent a fire hazard.

3.4. MOUNT ON A TRUSS

1. Screw two clamps into threaded holes on the bottom of the machine. Use two Doughty Half Couplers M10 for truss mounting (MFX3106) and place the pair in x or in y direction.

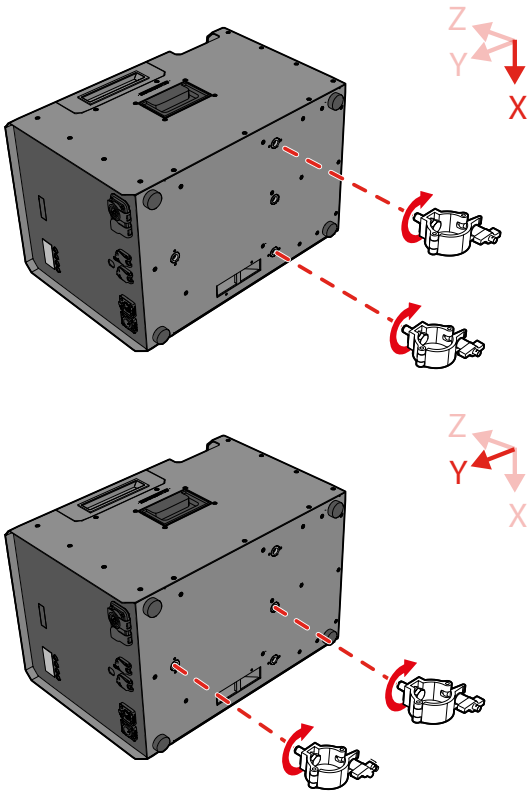

2. Mount the clamps firmly on a truss.

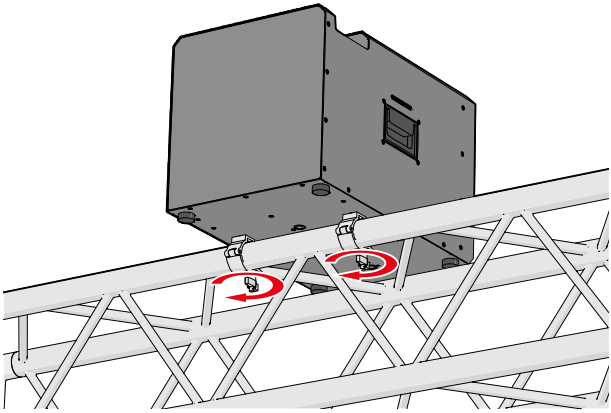

3. Secure the FLAMEBLAZER 5-WAY onto the truss using a safety steel (MFX3110).

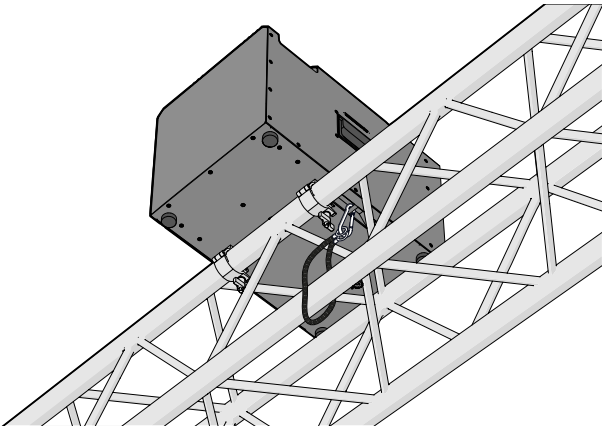

4. Take the necessary safety precautions, including:
   a. Creating risk zones in accordance with section 2.6.
   b. Insert blanking nozzles in unused outputs and disable the output in the software.
   c. Making sure that the direct output will be free from persons, animals and property.
   d. Making sure there are no objects near the machine and within the output distance that can be damaged or catch fire by the emitted heat, flame and fuel from the FLAMEBLAZER 5-WAY.

3.5. CONNECT THE MACHINE

1. Install the ARM CONTROLLER in compliance with the instructions from the ARM CONTROLLER User and Installation Manual (PART01882).
2. Connect the PowerCon TRUE1 power cable to the power input of the FLAMEBLAZER 5-WAY. Connect the other end to a 100-250 Vac (50-60 Hz) power source.
3. Connect the correct cables between the ARM CONTROLLER, the FLAMEBLAZER 5-WAY, the control equipment, and other ARM SYSTEM components and machines (if applicable). Check the following variants for connection details.

A The FLAMEBLAZER 5-WAY is controlled with DMX. The DMX signal and the ARM signal have separate cables.

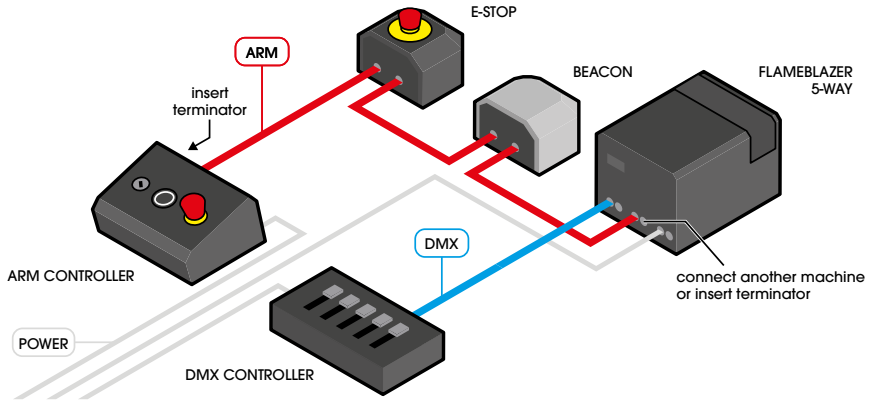

B The FLAMEBLAZER 5-WAY is controlled with DMX. The DMX signal and the ARM signal are combined.

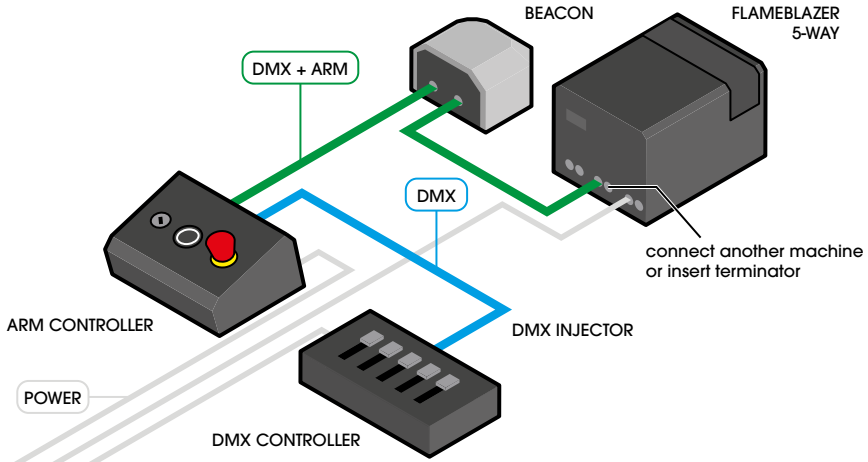

4. If controlled with DMX: Use the display and buttons or a RDM controller to assign DMX addresses, see Chapter 1.8.

For more connection and configuration options, refer to the ARM SYSTEM Configuration Manual (PART02323).

⚠ CAUTION	Do not connect more units to a single electrical circuit than the installed fuse is able to handle. (Calculate the summed load with the electrical data from Chapter 1)
NOTICE	Insert a TERMINATOR in the last ARM output of each line to close the safety circuit. The ARM SYSTEM will not work when a line remains open.
NOTICE	Always plug in a DMX Terminator into the DMX output of the final unit in the control sequence. Using a DMX Terminator improves signal and reliabillity.

3.6. USING THE ARM OVERRIDE KEY SWITCH

⚠ WARNING	Only override the ARM system when using other approved safety systems.

In installations where an ARM CONTROLLER is not feasible, the FLAMEBLAZER 5-WAY may be armed via the onboard override key switch. This should only be done where other safety systems have been implemented to restrict unauthorised access and mitigate risks.

1. Connect the correct cables between the FLAMEBLAZER 5-WAY, the control equipment, and other components and machines (if applicable).
2. Set the key switch to OFF.
   If the machine is connected to power, the FX LED lights in red, indicating the system is now armed and the FLAMEBLAZER 5-WAY is ready to be operated.

3.7. FIRE WITH DMX

⚠ WARNING	Check the machine for debris and corrosion before use. Clean or remove any residue in accordance with chapter 5.
⚠ WARNING	Always check if the a nozzle is installed on all outputs and if it is the correct nozzle.
⚠ CAUTION	Wind can influence the effect and cause flames and fuel to divert off vertical.

1. Power the machine.
2. Make sure that the prescribed safety zone is clear and there is a suitable clearance above the unit for the chosen nozzle.
3. Set the safety key on the ARM CONTROLLER in the ON position. Make sure the safety key on the FLAMEBLAZER 5-WAY is set to ON. The FX LED lights in red, indicating the system is now armed and the FLAMEBLAZER 5-WAY and other connected SFX machines are ready to be operated.
   If no ARM CONTROLLER is used, set the safety key on the FLAMEBLAZER 5-WAY to OFF. The FX LED lights in red, indicating the system is now armed and the FLAMEBLAZER 5-WAY is ready to be operated.

NOTICE	If the safety key on the FLAMEBLAZER 5-WAY is switched to OFF and an ARM CONTROLLER is connected, an error (131) will be displayed and the machine can not be used. Disconnect the ARM CONTROLLER or switch the safety key on the FLAMEBLAZER 5-WAY to ON.

4. Activate the DMX enable address by setting the DMX value between 100 and 154. The pump is activated and pressurizes the system. The FX LED indicator on the machine will flash.

5. When it's time to flame, set the DMX value of the wanted output for **Effect trigger** between 200 and 255.

NOTICE	The maximum continuous duration of the effect per nozzle is 5 seconds. After this period the effect on that nozzle will stop automatically. To start the effect again you must disable and re-enable the **Effect trigger**. There is no limit on the total effect time as long as you switch nozzles within 5 seconds.

6. Set the DMX value for **Effect trigger** between 0 and 199 if you want to stop flaming.
7. Set the safety key in the OFF position to disarm the ARM SYSTEM and disable operation of the FLAMEBLAZER 5-WAY and other connected SFX machines.

3.8. USE THE EMERGENCY STOP

NOTICE	This chapter only applies when an ARM CONTROLLER is connected.

1. When an emergency occurs or is about to occur with the FLAMEBLAZER 5-WAY, you press the emergency stop button on the ARM CONTROLLER or on an external E-STOP (if present).
   As a result the pressure will be removed from the system and the ignition transformer will be blocked. Any related hazard or property damage is stopped and prevented.
2. Set the safety key on the ARM CONTROLLER to the OFF position.
3. Resolve the emergency situation and inspect the FLAMEBLAZER 5-WAY.
4. Release the emergency stop and perform a reset. For instructions, refer to the ARM CONTROLLER User and Installation Manual (PART01882).
5. If DMX is used, set the enable and effect channel back to 0.

4. TROUBLESHOOTING

Code	Meaning	Solution
016	Pump problem.	Contact MAGIC FX.
018	Pressure keeps dropping.	Make sure the fuel can is not empty. If the problem is not solved, contact MAGIC FX.
019	Pressure not released	Make sure the fuel can is (still) connected correctly. If the problem is not solved, contact MAGIC FX.
020	Pressure Sensor Failure.	Contact MAGIC FX.
121	Orientation of device out of safe bounds.	Keep the device within previously described safe bounds.
131	The safety key on the FLAMEBLAZER 5-WAY is switched to OFF and an ARM CONTROLLER is connected.	Switch the safety key on the FLAMEBLAZER 5-WAY to ON.
		Disconnect the ARM CONTROLLER.

Troubleshooting

Always contact MAGIC FX if any malfunctions or errors occur that cannot be solved with the instructions as described in this manual.

5. MAINTENANCE

To achieve the maximum service life of the FLAMEBLAZER 5-WAY you must regularly clean the FLAMEBLAZER 5-WAY and test if it is functioning correctly.

Before conducting any maintenance ensure the machine is switched off and disconnected from a power source and the machine is not hot from recently being used. Always use personal protective equipment such as safety glasses and gloves when handling fuels.

Maintenance task	Activity
General clean.	Remove any foreign objects from burn chamber before every use being careful not to move or damage the spark ignition probes. Remove any dust or dirt from hose connections with a non-abrasive damp cloth.

Maintenance task	Activity
Inspect and clean nozzles.	Remove the nozzle with the FLAMEBLAZER Nozzle exchange tool. Submerge the nozzle in Isopropanol for minimum of 1 minute. Remove from the solution and when dry use compressed air to blow through the nozzle in opposite direction of fuel. Before inserting the nozzle back into machine conduct a visual check of the washer seal to make sure no damage to the soft material and replace the washer seal if damaged.
Inspect and clean spark ignition probes.	Any foreign particles should be removed from the probes, which can be cleaned with Isopropanol and a light abrasive cloth. Ignition probes should not be adjusted from the factory setting as this is critical to safe and reliable ignition. To check they are in the correct position each pair of probes must have a gap from tip to tip of 4 mm (+/-2 mm) and opposite probes must have a gap from tip to tip of 16 mm (+2 mm). If they do not have these gaps or are miss-aligned in anyway contact MAGIC FX.

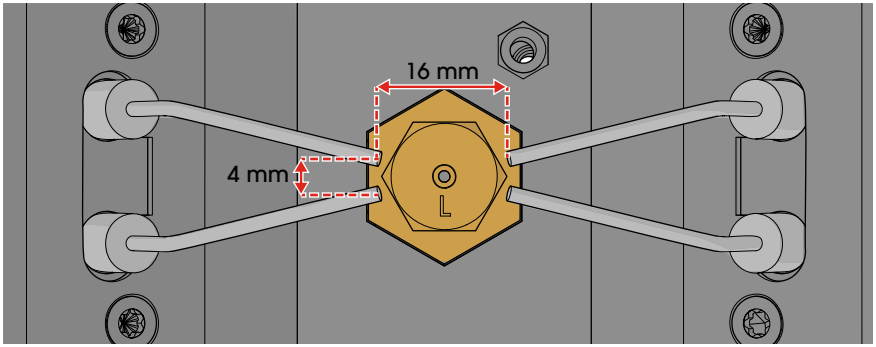

The FLAMEBLAZER Nozzle exchange tool contains ridges for bending and aligning the probes. The rod is 16 mm at one point for inspecting the spark ignition probes, as indicated here:

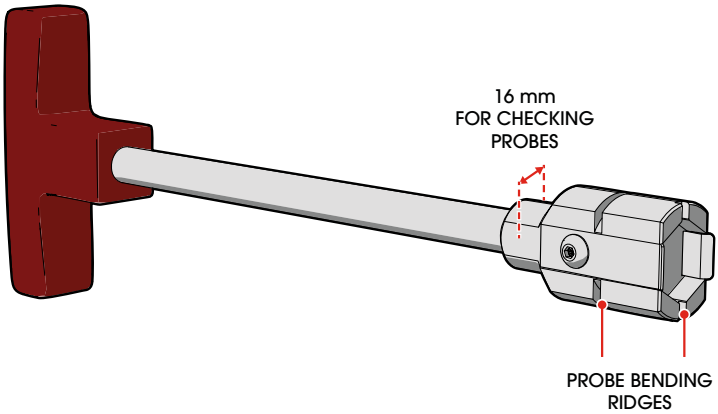

Contact MAGIC FX if the FLAMEBLAZER 5-WAY is not functioning correctly.

Firmware updates can add additional features and fix bugs so regulalry check on the website or with your MAGIC FX account manager to ensure you have the latest version.

⚠ DANGER	Do not replace parts yourself; always consult MAGIC FX if necessary.

6. CORRECT DISPOSAL

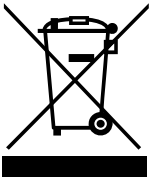

This symbol on the product and / or accompanying documents means that used electrical and electronic products should not be mixed with general household waste. For proper treatment, recovery and recycling, please take this product to designated collection points where it will be accepted free of charge. Alternatively, in some countries you may be able to return your products to your local retailer upon purchase of an equivalent new product. Disposing of this product correctly will help save valuable resources and prevent any potential negative effects on human health and the environment, which could otherwise arise from inappropriate waste handling. Please contact your local authority for further details of your nearest designated collection point. Penalties may be applicable for incorrect disposal of this waste, in accordance with your national legislation.

7. EC DECLARATION OF CONFORMITY

MAGIC FX B.V. declares as manufacturer and composer of the technical construction file that the product with the following specifications:

Name machine	: FLAMEBLAZER® 5-WAY
Type	: MFX1402
Voltage	: 220-250Vac 50/60Hz
Serial number	: on product
Year of construction	: on product

Is in conformity with the minimal safety regulations as stated in the following directive(s):

- LVD (2014/35/EU) Low Voltage Directive
- EMC (2014/30/EC) ElectroMagnetic Compatibility
- RoHS (2011/65/EU) Restriction of the use of certain Hazardous Substances
- WEEE (2012/19/EU) Waste Electrical & Electronic Equipment

The following harmonized standards were applied:

- NEN-EN-ISO 12100:2010 Safety of machinery - General principles for design - Risk assessment and risk reduction.
- NEN-EN-IEC 62368-1:2020 Audio/video, information and communication technology equipment - Part 1: Safety requirements
- NEN-EN-IEC 61000-6-1:2007 Electromagnetic compatibility (EMC) - Part 6-1: Generic standards - Immunity for residential, commercial and light-industrial environments
- NEN-EN-IEC 61000-6-3: 2007 Electromagnetic compatibility (EMC) - Part 6-3: Generic standards - Emission for residential, commercial and light-industrial environments

☐ Original declaration of conformity

☑ Translation of the original declaration of conformity

Name manufacturer	: MAGIC FX B.V.
Address	: Schouwrooij 27, 5281 RE BOXTEL
Country	: The Netherlands
CEO	: B. Veroude
Date	: 24-12-2024
Signature	

MAGICFX®

WWW.MAGICFX.EU