USER AND INSTALLATION MANUAL

ENGLISH

MAGICFX®

/CO2LAUNCHER.®

CO2 FX

PART01743

rev 01-01

DISCLAIMER

⚠ WARNING	Read this manual carefully before installing and/or using this product. Failure to read the manual and to follow the printed instructions may lead to personal injury and/or damage to the product.

© 2019 MAGICFX®
All rights reserved.

Nothing from this publication may be copied, reproduced and/or published by means of printing, photocopying or by any other means, without the prior written approval of MAGIC FX.

MAGIC FX reserves the right to modify specifications stated in this manual.

TRADEMARKS

Any brand names mentioned in this manual are registered trademarks of their respective owners.

LIABILITY

MAGIC FX accepts no liability for claims from third parties arising from unauthorised use, use other than that stated in this manual, and use other than in accordance with the General Conditions registered at the Chamber of Commerce.

We further refer to the General Conditions. These are available on request, free of charge.

Although considerable care has been taken to ensure a correct and comprehensive description of all relevant components, the manual may nonetheless contain errors and inaccuracies.

Should you detect any errors or inaccuracies in the manual, we would be grateful if you would inform us. This helps us to further improve our documentation.

TABLE OF CONTENTS

Disclaimer		2
Trademarks		2
Liability		2
Foreword		4
Language		4
Revision table		4
1	**Meet the MAGICFX® CO2LAUNCHER!**	**5**
1.1	**Main parts**	**5**
1.2	**Product identification**	**6**
1.3	**Technical data**	**6**
1.4	**Accessories**	**7**
1.5	**Projectiles**	**7**
2	**Shoot safely!**	**8**
2.1	**General safety rules**	**8**
2.2	**CO_2**	**8**
2.3	**Indoor use**	**9**
2.4	**Noise level**	**9**
2.5	**Safety symbols**	**9**
2.6	**Precautions for operation**	**10**
3	**Let's shoot!**	**11**
3.1	**(De)attach the shoulder strap**	**11**
3.2	**Connect CO_2**	**11**
3.3	**(Re)load with textiles**	**13**
3.4	**(Re)load with confetti and/or streamers**	**16**
3.5	**Shoot**	**17**
3.6	**Clean up**	**19**
4	**Troubleshooting**	**22**
5	**Maintenance**	**22**
6	**Correct disposal**	**22**
7	**Declaration of Conformity**	**23**

FOREWORD

Congratulations! You have bought a great new product from MAGIC FX.

This manual contains all information required for the intended use of the equipment. Deviation from the described intended use can result in a hazardous situation and/or property damage.

This manual includes notes and warnings on safe operation of the equipment. These notes and warnings are accompanied by the following icons. Read them attentively!

⚠ DANGER	Indicates a hazardous situation that, if not avoided, will result in death or serious injury. This signal word is to be limited to the most extreme situations.
⚠ WARNING	Indicates a hazardous situation that, if not avoided, could result in death or serious injury.
⚠ CAUTION	Indicates a hazardous situation that, if not avoided, could result in minor or moderate injury.
NOTICE	Indicates information considered important, but not hazard-related (e.g. messages relating to property damage).

LANGUAGE

This document contains the original instructions in English. In case you require other languages please contact MAGIC FX.

REVISION TABLE

Doc nr	Revision	Date	Description	Author	Approved
PART01743	01-00	10-10-2019	Initial release	CSK	WBO
PART01743	01-01	18-09-2020	D.O.C	NVE	LL

1 MEET THE MAGICFX® CO2LAUNCHER!

The MAGICFX® CO2LAUNCHER is a handheld gun-shaped device for safe shooting of CO_2, confetti, streamers or T-shirts into the air.

Before operation the MAGICFX® CO2LAUNCHER needs to be connected to a CO_2 cylinder. When the user squeezes the handle, the CO_2 is released from the barrel. The shot is accompanied by a strong hissing sound and a white plume of smoke will be visible from the barrel. Depending on the barrel content; confetti, streamers or a T-shirt will leave the barrel.

NOTICE Visibility of the CO_2 effect can vary due to air humidity. The output will be more visible when there is high absolute air humidity.

1.1 MAIN PARTS

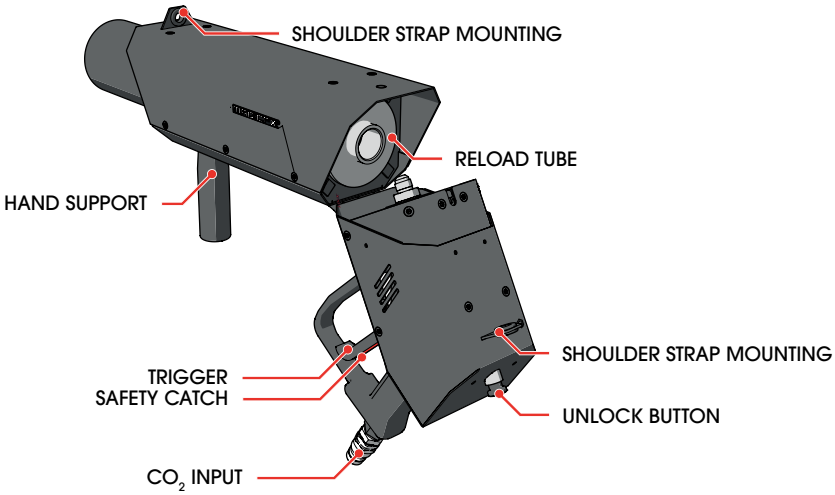

Main parts

1.2 PRODUCT IDENTIFICATION

Type plate

1.3 TECHNICAL DATA

Product	Product Name	MAGICFX® CO2LAUNCHER	
	Product Code	MFX1170	
	Product Type	CO2 FX	
Main Dimensions	Length	640 mm	25.1 in
	Width	107 mm	4.2 in
	Height	271 mm	10.7 in
Weight	Empty weight	4,2 kg	9.3 lb
Environment	Minimum Temperature	-15 °C	5 °F
	Maximum Temperature	100 °C	212 °F
	Humidity (Relative)	20% to 90% (non condensing)	
	IEC 60529 (IP) Rating	IP12	
Controlling	Control Options	Manual	

Technical data

1.4 ACCESSORIES

Code	Product	Included
MFX1171	MAGICFX® CO2LAUNCHER LAUNCHING TUBE	1x
MFX1172	MAGICFX® CO2LAUNCHER LIFTING CORE	
MFX1173	MAGICFX® CO2LAUNCHER CAP STICKER	
MFX3317	Case for MAGICFX® CO2LAUNCHER	
MFX1114	CO_2 High Pressure Hose 3/8 Male - Female, 1.25 m	
MFX1105	CO_2 High Pressure Hose 3/8 Male - Female, 2 m	
MFX1106	CO_2 High Pressure Hose 3/8 Male - Female, 3 m	
MFX1121	CO_2 High Pressure Hose 3/8 Male - Female, 5 m	
MFX1108	CO_2 High Pressure Hose 3/8 Male - Female, 10 m	
MFX1109	CO_2 High Pressure Hose 3/8 Male - Female, 15 m	
MFX1122	CO_2 High Pressure Hose 3/8 Male - Female, 20 m	
MFX1110	CO_2 90 Degrees Connector 3/8	
MFX1103	CO_2 Bottle to Hose Connector	
MFX1115	CO_2 Bottle to Hose Connector 90 Degrees	

Accessories

Please contact MAGIC FX for additional possibilities.

1.5 PROJECTILES

The MAGICFX® CO2LAUNCHER can shoot confetti, streamers and T-shirts. The maximum output distance per shot depends on the speed the trigger is pulled and the type of projectile. Check the following table.

Type of projectile	Max. load per tube	Output distance
Metallic confetti	0,5 kg	12 m
Paper confetti	0,35 kg	12 m
Streamers	3 polybags	20 m
T-shirt	1 pc.	30 m

Projectile types and related loads and output

NOTICE Wind and other weather circumstances will influence the output height and output distance of the confetti. The given values are estimated values.

2 SHOOT SAFELY!

The MAGICFX® CO2LAUNCHER has been designed and constructed in such a manner that it can be used safely. This applies to the use, the circumstances and the regulations as described in this documentation. Reading this documentation and following the instructions are therefore necessary for everyone who works with the MAGICFX® CO2LAUNCHER.

The MAGICFX® CO2LAUNCHER must be used in surroundings that:

- Have a stable temperature of between -15 and 100 °C.
- Have a relative humidity degree between 20% and 90% (non condensing).
- Are free of dust, corrosive gases and high concentrations of organic vapours.
- Are not situated in the vicinity of a source of vibration.

2.1 GENERAL SAFETY RULES

- Only authorised people may work with the MAGICFX® CO2LAUNCHER.
- Do not use the MAGICFX® CO2LAUNCHER if there are people or animals in the direct output.
- Make sure that children, unauthorised people and animals do not obtain access to the MAGICFX® CO2LAUNCHER.
- Do not remove any safeguards, safety caps and safety symbols.
- All required safety devices must be in good condition and function properly.
- Ensure sufficient lighting of the surroundings.
- Keep the workplace clean.

2.2 CO_2

The MAGICFX® CO2LAUNCHER uses liquid or gaseous CO_2 as input. The application of CO_2 involves serious risks. Make sure that you are well informed on these risks before installation and/or operation. Always use approved CO_2 cylinders, hoses and connectors. Always consult your CO_2 supplier for regulations and instructions on safe installation and use.

MAGIC FX is not liable for unsafe situations, accidents and damage that are the result of incorrect working with CO_2 gas and CO_2 cylinders.

⚠ WARNING Inadequate installation and/or operation of a CO_2 powered machine and CO_2 cylinders can lead to death or serious injury. Always follow the instructions from this manual, from your CO_2 supplier and from local authorities.

2.3 INDOOR USE

The MAGICFX® CO2LAUNCHER is designed for outdoor use and use in well-ventilated indoor spaces. When used indoors, make sure you take the necessary preparations. These preparations could include, but are not limited to:

- Consulting your CO_2 supplier.
- Calculating the reduction of oxygen for the indoor space.
- Checking the location for spots where CO_2 could accumulate and taking preventive actions.
- Installing CO_2 monitoring devices that will warn for hazardous CO_2 levels.

⚠ DANGER Do not use the MAGICFX® CO2LAUNCHER in poorly ventilated confined spaces. Exposure to high levels of CO_2 gas can cause symptoms like headache, nausea, loss of consciousness or even death.

2.4 NOISE LEVEL

The environmental noise level measured at 1 m (39.4 in) from the product is 110 dB(A). This level of noise is only reached during the short shooting instances. Therefore hearing protection is not necessary.

⚠ WARNING Do not operate the MAGICFX® CO2LAUNCHER close to yourself or to others for a long period of time. If you experience any hearing loss or ringing in the ears, you should immediately stop using the unit.

2.5 SAFETY SYMBOLS

Symbol	Meaning	Position
	Read the manual carefully before use!	Back of the launcher
	Do not trigger when opened!	Top of the launcher

Safety symbols

2.6 PRECAUTIONS FOR OPERATION

⚠ WARNING	Using a damaged launcher can lead to serious injury and property damage. Always inspect the launcher thoroughly before operation.

⚠ WARNING	Do not trigger the launcher when opened. Triggering the launcher when opened causes a significant higher reactive force. This also results in the CO_2 leaving the launcher in an undesirable way. This can lead to serious injuries.

⚠ WARNING	Always hold the launcher firmly with two hands while in a stable standing position. When fired a reactive force is produced, causing a backlash vibration. This can lead to injuries when the launcher is released from the hands unintentionally or when the backlash causes the user to lose balance.

⚠ WARNING	Missing or obscured safety symbols on the machine can lead to death or serious injury. Make sure all safety symbols are correctly in place, see section 2.5.

NOTICE	During operation electrostatic discharge can occur when the machine is touched. Prevent the discomfort of a possible static shock by wearing gloves.

3 LET'S SHOOT!

3.1 (DE)ATTACH THE SHOULDER STRAP

1 Attach the shoulder strap to the shoulder strap mounting holes on the launcher.

Make sure the shoulder strap is secured properly, the launcher can fall otherwise.

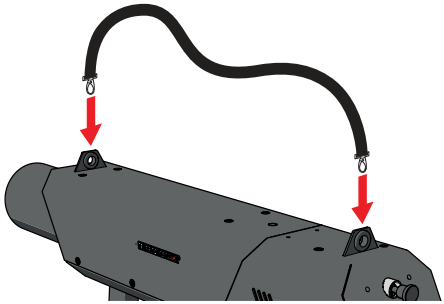

2 Deattach the shoulder strap by removing the shoulder strap out of the shoulder strap mounting holes.

3.2 CONNECT CO_2

1 Make sure that the safety catch is in locking position.

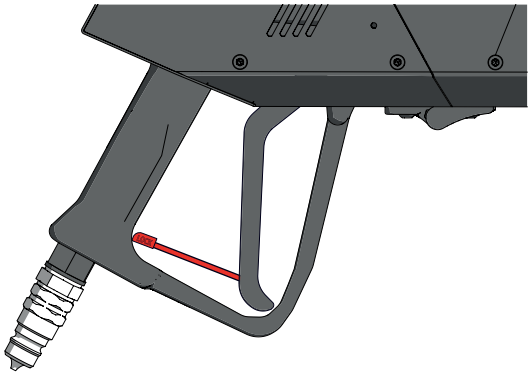

2 Connect the CO_2 hose to the CO_2 quick connector.

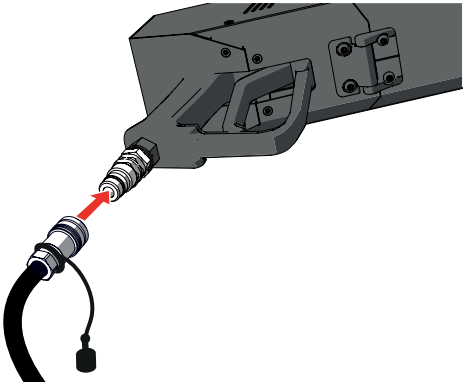

3 Connect the CO_2 Bottle to Hose Connector to a CO_2 cylinder.

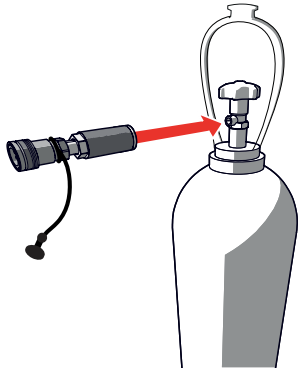

4 Connect the CO_2 hose to the CO_2 Bottle to Hose Connector on the CO_2 cylinder.

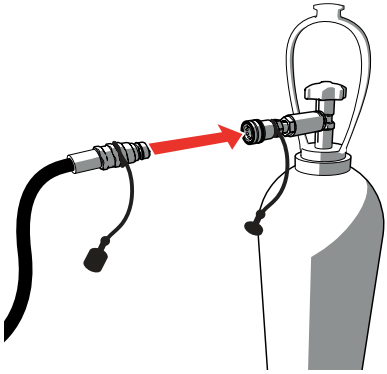

5 Open the CO_2 cylinder.

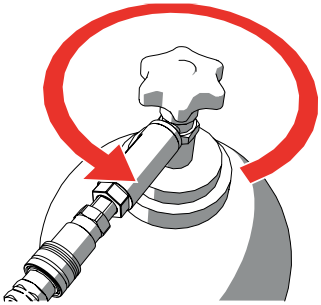

3.3 (RE)LOAD WITH TEXTILES

⚠ WARNING Filling the tube with products than otherwise specified, can cause serious injury or death.

1 Push the unlock button to open the launcher.

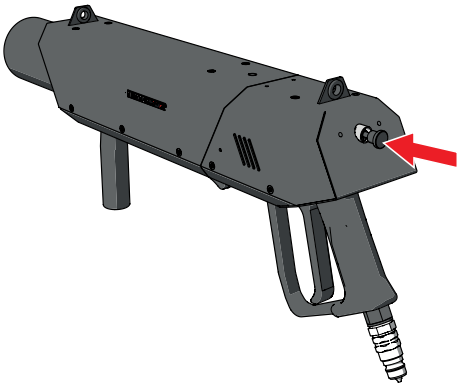

2 Remove the tube from the barrel.

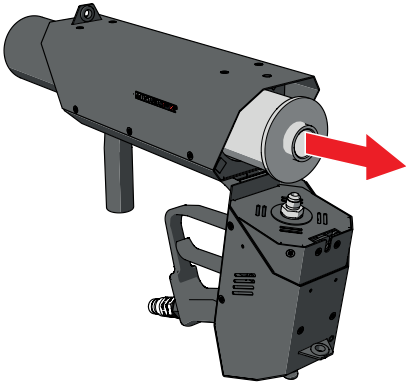

3 Make sure to fold T-shirts correctly before shooting.

1. Fold the sides of the T-shirt to the center.
2. Fold the T-shirt in half.
3. Lay the T-shirt flat.
4. Start rolling the T-shirt from the neck into a light roll.
   When done, pull the opposite side to ensure the tightness of the roll.
5. Fixate the roll by using rubber bands.

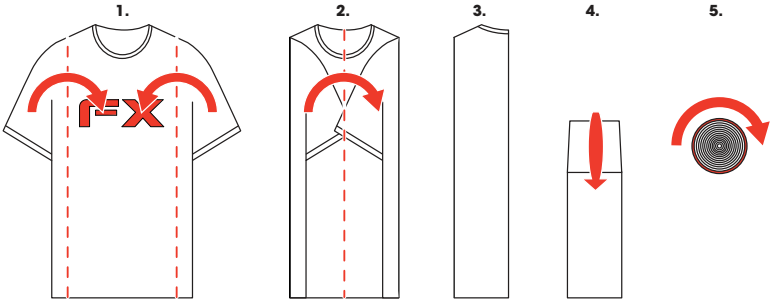

4 Fill the tube with soft and safe textiles like t-shirts, scarfs or flags.

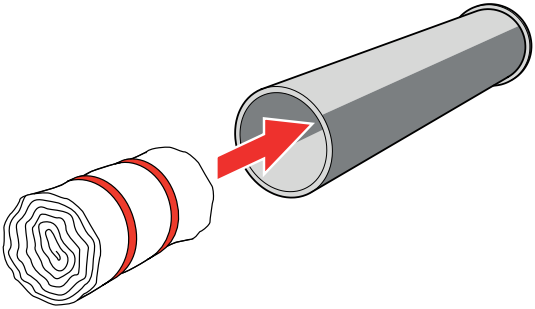

NOTICE You can use the launcher with and empty tube. When the tube is empty, CO_2 will shoot in the air and a white plume of smoke will be visible.

NOTICE Place the empty tube in the launcher if you want to use the launcher only for a CO_2 effect.

5 Place the tube in the barrel.

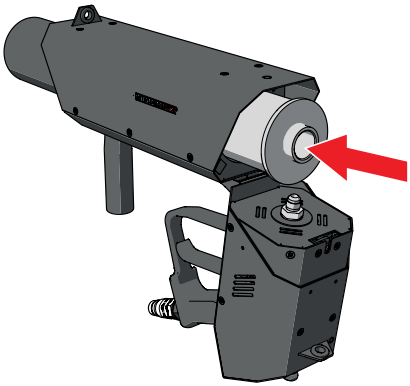

6 Close the launcher.

⚠ WARNING Make sure to completely close the launcher. Failure to do so could lead to injury.

3.4 (RE)LOAD WITH CONFETTI AND/OR STREAMERS

1 Remove the tube from the barrel, see Section 3.2, steps 1 and 2.

2 Place a lifting core in the bottom of the tube.

Make sure the lifting core lies flat and closes off the hole in the tube!

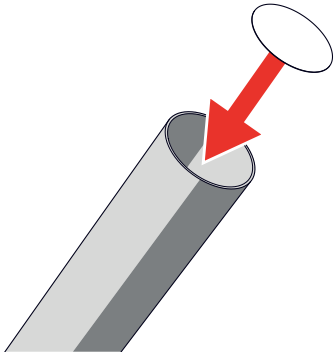

3 Fill the tube with confetti and/or streamers. The maximum dimensions of the streamers may be 5 m x 0,85 cm or 10 m x 1,5 cm.

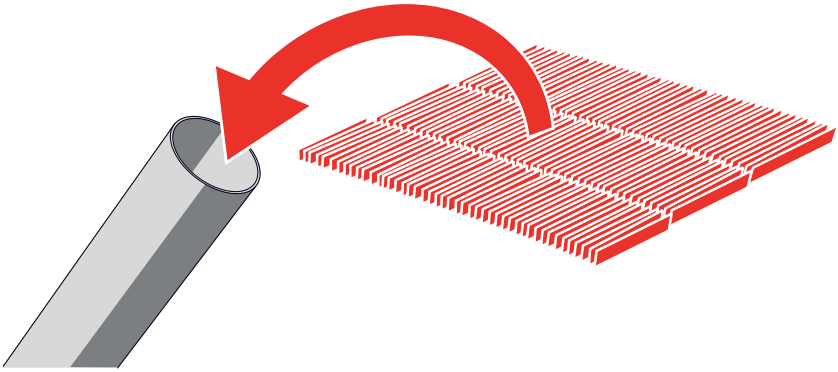

4 Place an end sticker on top of the tube.

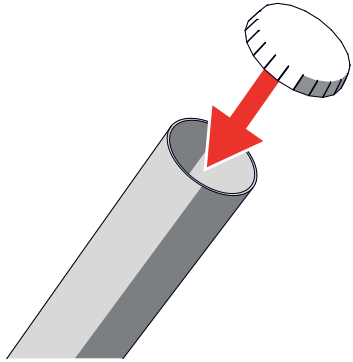

5 Place the tube in the barrel and close the launcher, see Section 3.2, step 5 and 6.

3.5 SHOOT

1 Carefully walk to the desired shooting position.

2 Unlock the safety catch.

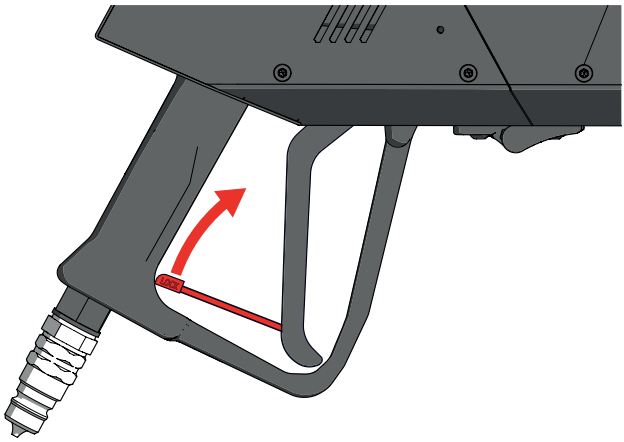

3 Firmly hold with two hands and aim above the audience.

Make sure there are no persons or animals in the direct output of the MAGICFX® CO2LAUNCHER.

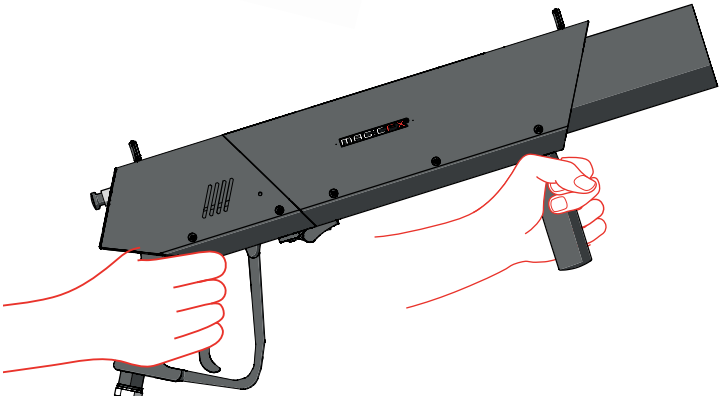

4 When it's time to shoot, squeeze the handle.

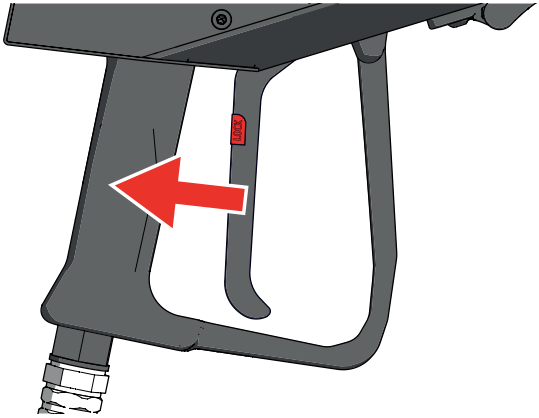

NOTICE The faster you squeeze the handle, the faster the projectile exits the launcher.

5 Enjoy the view.

6 Release the handle to stop shooting.

7 Place the safety catch back in locking position.

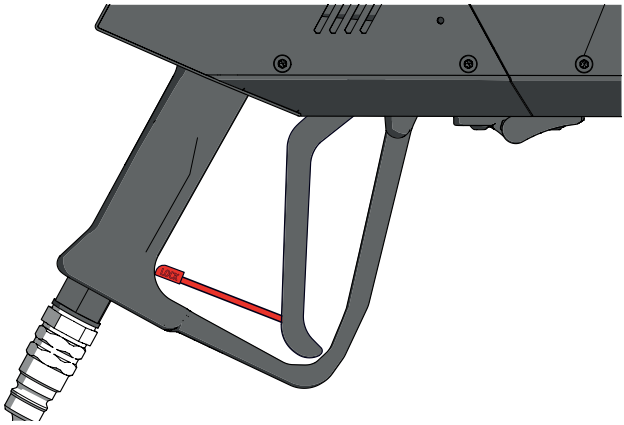

3.6 CLEAN UP

1 Close the connected CO_2 cylinder.

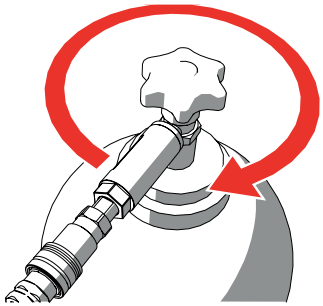

2 Unlock the safety catch.

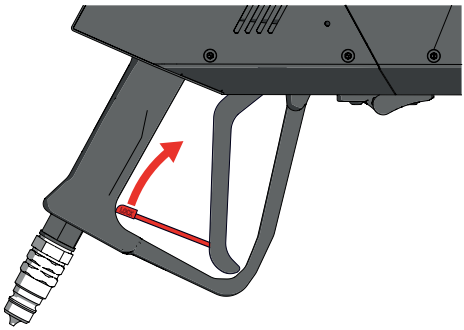

3 Squeeze the handle to release the remaining pressure.

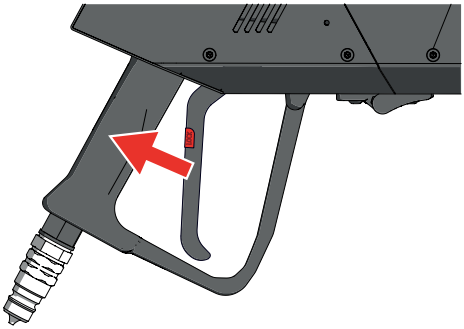

4 Place the safety catch back in locking position.

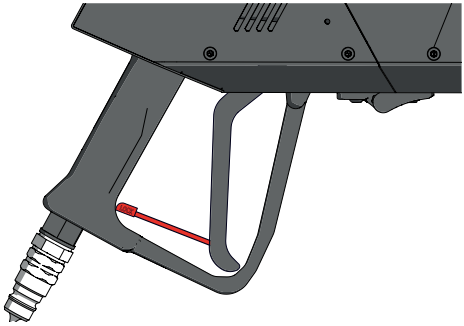

5 Disconnect the CO_2 hose from the CO_2 quick connector on the launcher.

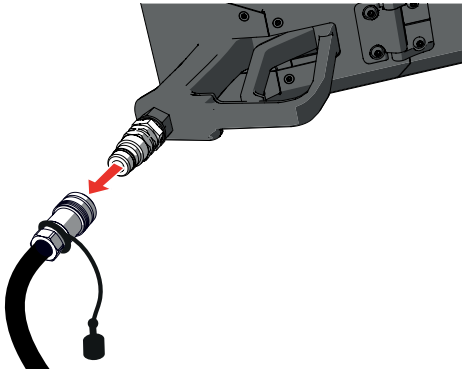

6 Disconnect the CO_2 hose from the CO_2 Bottle to Hose Connector on the CO_2 cylinder.

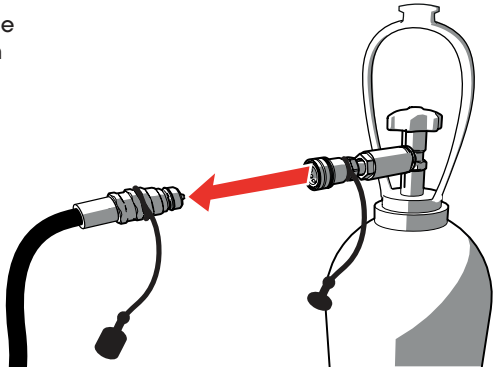

7 Remove the CO_2 Bottle to Hose Connector from the cylinder.

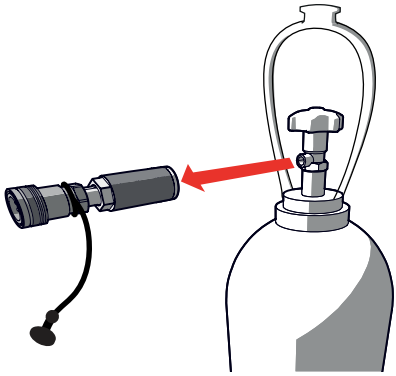

8 Store the launcher.

4 TROUBLESHOOTING

Always contact MAGIC FX if any malfunctions or errors occur that cannot be solved with the instructions as described in this manual.

5 MAINTENANCE

To achieve the maximum service life of the MAGICFX® CO2LAUNCHER you must regularly clean the MAGICFX® CO2LAUNCHER and test if it is functioning correctly.

Contact MAGIC FX if the MAGICFX® CO2LAUNCHER is not functioning correctly.

⚠ DANGER	Do not replace parts yourself. Always consult MAGIC FX if necessary.

6 CORRECT DISPOSAL

Disposing of this product correctly will help save valuable resources and prevent any potential negative effects on human health and the environment, which could otherwise arise from inappropriate waste handling.

Please contact your local authority for further details of your nearest designated collection point.

Penalties may be applicable for incorrect disposal of this waste, in accordance with your national legislation.

7 DECLARATION OF CONFORMITY

MAGIC FX B.V. declares as manufacturer and composer of the technical construction file that the product with the following specifications:

Name machine	: CO2LAUNCHER
Type	: MFX1701
Serial number	: on product
Year of construction	: on product

Is in conformity with the minimal safety regulations as stated in the following directive(s):

- PED 2014/68/EU category SEP
  (products in this category cannot be provided with a CE-marking)

The following harmonized standards were applied:

- NEN-EN-ISO 12100:2010 Safety of machinery - General principles for design - Risk assessment and risk reduction.

☐ Original declaration of conformity
☑ Translation of the original declaration of conformity

Name manufacturer	: MAGIC FX BV
Address	: Schouwrooij 27, 5281 RE BOXTEL
Country	: The Netherlands
CEO	: B. Veroude
Date	: 18-9-2020
Signature	:

MAGICFX®

WWW.MAGICFX.EU