USER AND INSTALLATION MANUAL

ENGLISH

MAG:CFX®

/FX-SWITCHPACK.®

CE

CONTROL GEAR

PART01245

rev 01-02

DISCLAIMER

⚠ WARNING	Read this manual carefully before installing and/or using this product. Failure to read the manual and to follow the printed instructions may lead to personal injury and/or damage to the product.

© 2019 MAGICFX®
All rights reserved.

Nothing from this publication may be copied, reproduced and/or published by means of printing, photocopying or by any other means, without the prior written approval of MAGIC FX.

MAGIC FX reserves the right to modify specifications stated in this manual.

TRADEMARKS

Any brand names mentioned in this manual are registered trademarks of their respective owners.

LIABILITY

MAGIC FX accepts no liability for claims from third parties arising from unauthorised use, use other than that stated in this manual, and use other than in accordance with the General Conditions registered at the Chamber of Commerce.

We further refer to the General Conditions. These are available on request, free of charge.

Although considerable care has been taken to ensure a correct and comprehensive description of all relevant components, the manual may nonetheless contain errors and inaccuracies.

Should you detect any errors or inaccuracies in the manual, we would be grateful if you would inform us. This helps us to further improve our documentation.

TABLE OF CONTENTS

Disclaimer		**2**
Trademarks		**2**
Liability		**2**
Foreword		**4**
Language		**4**
Revision table		**4**
1	**Meet the MAGICFX® FX-SWITCHPACK!**	**5**
1.1	**Main parts**	**5**
1.2	**Technical data**	**6**
1.3	**Product identification**	**6**
1.4	**Accessories**	**7**
1.5	**Display panel**	**7**
1.6	**Sequence mode**	**10**
1.7	**Separate mode**	**11**
1.8	**Merged mode**	**11**
1.9	**RDM capability**	**12**
2	**Switch safely!**	**14**
2.1	**General safety rules**	**14**
2.2	**Rigging**	**14**
2.3	**Connecting FX-machines**	**14**
2.4	**Precautions for operation**	**15**
3	**Let's switch!**	**15**
3.1	**Install the switch**	**15**
3.2	**Connect the switch**	**17**
3.3	**Switch with DMX**	**19**
3.4	**Clean up**	**20**
4	**Maintenance**	**20**
5	**Troubleshooting**	**20**
6	**Correct disposal**	**20**
7	**EC Declaration of Conformity**	**21**

FOREWORD

Congratulations! You have bought a great new product from MAGIC FX.

This manual contains all information required for the intended use of the equipment. Deviation from the described intended use can result in a hazardous situation and/or property damage.

This manual includes notes and warnings on safe operation of the equipment. These notes and warnings are accompanied by the following icons. Read them attentively!

⚠ **DANGER**	Indicates a hazardous situation that, if not avoided, will result in death or serious injury. This signal word is to be limited to the most extreme situations.
⚠ **WARNING**	Indicates a hazardous situation that, if not avoided, could result in death or serious injury.
⚠ **CAUTION**	Indicates a hazardous situation that, if not avoided, could result in minor or moderate injury.
NOTICE	Indicates information considered important, but not hazard-related (e.g. messages relating to property damage).

LANGUAGE

This document contains the original instructions in English. In case you require other languages please contact MAGIC FX.

REVISION TABLE

Doc nr	Revision	Date	Description	Author	Approved
PART01245	01-00	14-11-2017	Initail release	MBO	TVA
PART01245	01-01	01-08-2019	A4 to A5 format	TFR	TVA
PART01245	01-02	30-09-2020	Changed accessories & added separate mode	NvE	LL

1 MEET THE MAGICFX® FX-SWITCHPACK!

The MAGICFX® FX-SWITCHPACK is a DMX switch for safely switching on and off multiple electronic special effects machines.

The MAGICFX® FX-SWITCHPACK is designed with unique safety features, including a DMX safety channel which keeps all other channels disabled untill you set it to a specific value.

1.1 MAIN PARTS

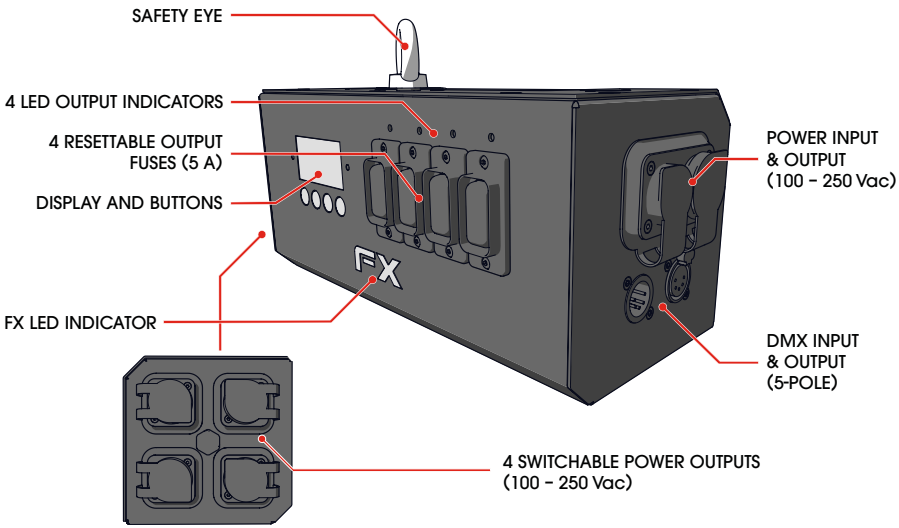

Main parts

1.2 TECHNICAL DATA

Product	Product Name	MAGICFX® FX-SWITCHPACK	
	Product Code	MFX3211	
	Product Type	CONTROL GEAR	
Main Dimensions	Length	140 mm	5.5 in
	Width	305 mm	12 in
	Height	133 mm	5.2 in
Weight	Weight	2.9 kg	6.4 lb
Package	Length	400 mm	15.7 in
	Width	260 mm	10.2 in
	Height	250 mm	9.8 in
	Packaged weight	4.2 kg	9.3 lb
Environment	Minimum Temperature	-10 °C	14 °F
	Maximum Temperature	50 °C	122 °F
Electrical	Voltage Input	100– 250 Vac	
	Voltage Frequency	50 – 60 Hz	
	Power Consumption Device	15 W	
	Max Load Consumption	3600 W	
	Power Connector	Neutrik® powerCON TRUE1 (in & out)	
	Power Output MAX	5 A per output with resettable output fuse (max. 16 A in total)	
Controlling	Control Options	DMX	
	Control Protocols	DMX512-A (ANSI E1.11) RDM (ANSI E1.20)	
	Control Connectors	Neutrik® 5 pole male / female XLR	
Configuring	Configure Options	On Device & RDM	

Technical data

1.3 PRODUCT IDENTIFICATION

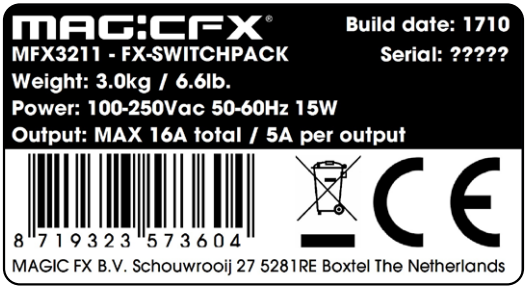

Type plate

1.4 ACCESSORIES

Code	Product	Included
MFX0311	Neutrik® powerCON TRUE1 - Male to Female - Link cable 10 m	
MFX0312	Neutrik® powerCON TRUE1 - Male to Female - Link cable 20 m	
MFX0322	Neutrik® powerCON TRUE1 - Male to Female - Link cable 0.5 m	
MFX0323	Neutrik® powerCON TRUE1 - Male to Female - Link cable 1.5 m	
MFX0324	Neutrik® powerCON TRUE1 - Male to Female - Link cable 3 m	
MFX0325	Neutrik® powerCON TRUE1 - Male to Female - Link cable 5 m	
MFX0326	Neutrik® powerCON TRUE1 - Male to Female - Link cable 15 m	
MFX0313	Schuko to Neutrik® powerCON TRUE1 - cable 1.5 m	
MFX3103	M10 twenty clamp for truss mounting	

Accessories

Please contact MAGIC FX for additional possibilities.

1.5 DISPLAY PANEL

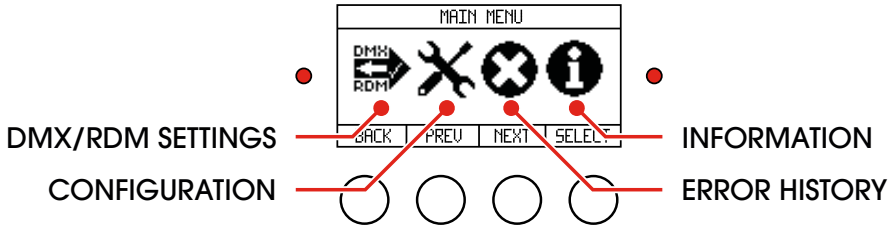

Display panel

The display panel is located on the backside of the MAGICFX® FX-SWITCHPACK. Check the following menu structure for all options in the menu. Use the buttons for navigation and selection. The left-hand LED blinks red when DMX is active. The right-hand LED continuously lights red when an error is present.

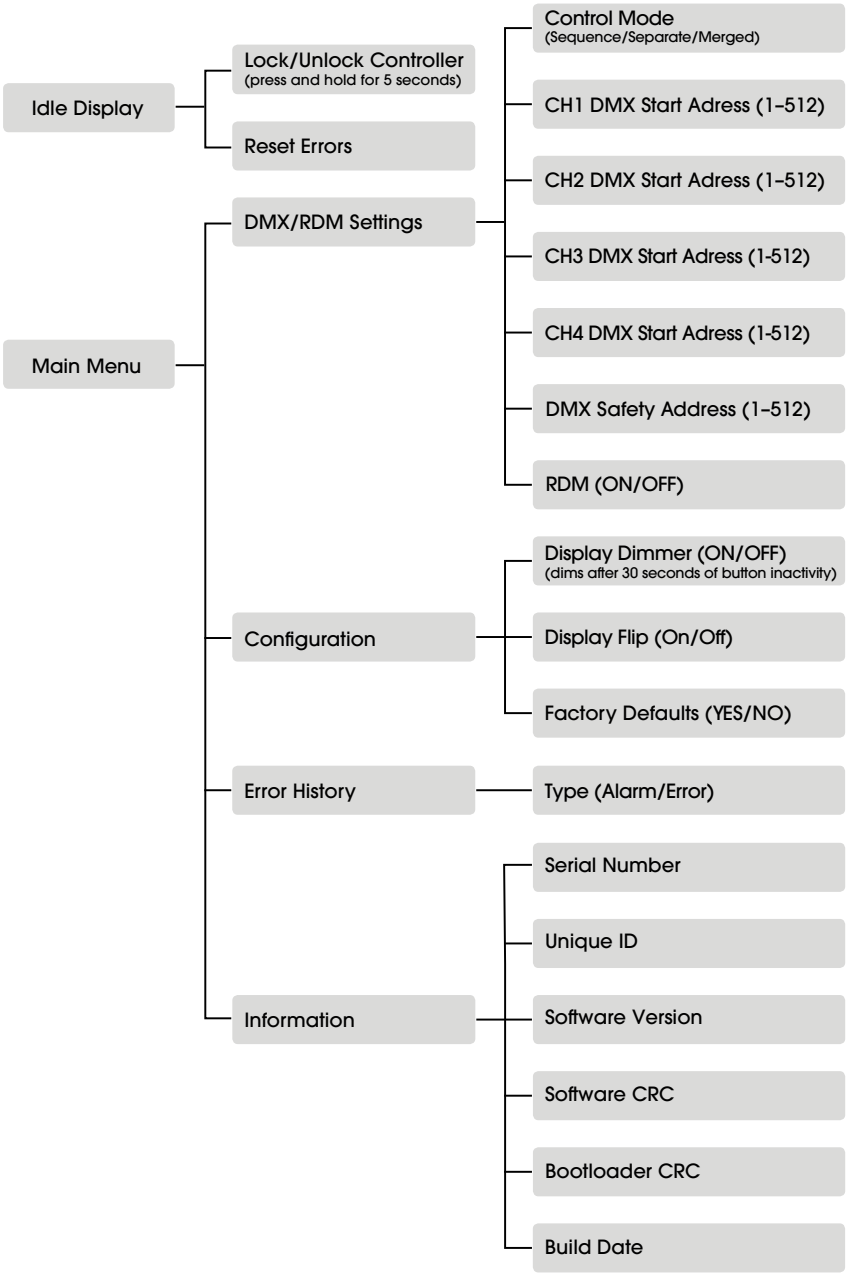

Menu structure

Menu function	Explanation
Lock/Unlock Controller	Holding the Lock button for more than 5 seconds will “lock” the display functions. Meaning buttons will not respond. This to avoid accidental change of parameters via display.To unlock, hold the Unlock button for more than 5 seconds.
Reset Errors	In case there is a locking error present, this button will reset the appliance. If the fault does not persist, the locking error will not reappear.
Control Mode (sequence/ Separate/ Merged)	Set the manner in which the 4 output channels are operated. In sequence mode, the dmx addresses of the output channels are always set sequential, no gaps allowed. Separate mode allows output channel dmx addresses to be placed individually anywhere in the address range. Multiple similar addresses are allowed. Merged mode automatically places all output channel dmx addresses on the same address.
CH1 DMX Start Address (1-512)	Setting output channel 1 DMX address.
CH2 DMX Start Address (1-512)	Setting output channel 2 DMX address.
CH3 DMX Start Address (1-512)	Setting output channel 3 DMX address.
CH4 DMX Start Address (1-512)	Setting output channel 4 DMX address.
DMX Safety Address (1-512)	Setting the DMX safety address.
RDM (On/Off)	This function turns on/off the RDM functionality.
Display Dimmer (On/Off)	Turn display dimmer on or off. If turned on, the display is dimmed automatically 30 seconds after the last button push.
Display Flip (On/Off)	Change display orientation from normal to up side down.
Factory Defaults (Yes/ No)	Restores the appliance factory default settings.
Type (Alarm/ Error)	Toggle between the occured locking error (Alarm) list, and blocking error (Error) list. Locking errors need intervention by user, although they are “auto-reset” 3 times before the appliance remains in error until reset by user. Blocking errors clear when the triggering fault disappears. 16 locked, and 16 blocked errors are logged. Top of the list shows the last occurring error.
Serial Number (DDDDD)	Appliance serial number as also printed on the appliance label.
Unique ID (HHHHHHHHHHH)	UID number as the appliance appears in the RDM device list after running discovery.

Software Version	Installed software version.
Software CRC	CRC of the functional software.
Bootloader CRC	CRC of the bootloader software.
Build Date	Release date of functional software.
Up-Time (DDDD:HH:MM:SS)	Time counter which indicates how long the appliance has been powered in total.
Effect-Time (DDDD:HH:MM:SS)	Time counter which indicates how long the effect has been activated in total.

1.6 SEQUENCE MODE

In sequence mode, the ouputs are controlled individually.

In sequence mode the MAGICFX® FX-SWITCHPACK works with 1 safety address and 4 sequential addresses. The Safety address cannot be the same as one of the sequential addresses.

Operating the addresses in sequence mode results in the following:

DMX Address	DMX Value (decimal)		Result
Safety address	0	99	Device disbaled
	100	154	Device enabled
	155	255	Device disabled
Start address	0	199	Output 1 disabled
	200	255	Output 1 enabled
Start address + 1	0	199	Output 2 disabled
	200	255	Output 2 enabled
Start address + 2	0	199	Output 3 disabled
	200	255	Output 3 enabled
Start address + 3	0	199	Output 4 disabled
	200	255	Output 4 enabled

Operation of the DMX addresses in sequence mode

NOTICE Make sure the outputs are deactivated before activating the safety address. The safety address cannot be activated when one or more outputs are activated.

When you link multiple machines with DMX, we advise you to use the same Safety address for all machines.

⚠ CAUTION Always plug in a DMX Terminator into the DMX output of the final unit in the control sequence. Using a DMX Terminator improves signal reliability.

1.7 SEPARATE MODE

In separate mode, the outputs are controlled individually.

In separate mode the MAGICFX® FX-SWITCHPACK works with 1 safety address and 4 separate settable operational addresses. The Safety address cannot be the same as one of the operational addresses. However, operational addresses can be the same as each other.

Operating the addresses in separate mode results in the following:

DMX Address	DMX Value (decimal)		Result
Safety Address	0	99	Device Disabled
	100	155	Device Enabled
	156	255	Device Disabled
Start Address CH1	0	199	Output 1 Disabled
	200	255	Output 1 Enabled
Start Address CH2	0	199	Output 2 Disabled
	200	255	Output 2 Enabled
Start Address CH3	0	199	Output 3 Disabled
	200	255	Output 3 Enabled
Start Address CH4	0	199	Output 4 Disabled
	200	255	Output 4 Enabled

Operation of the DMX addresses in merged mode

NOTICE Make sure the outputs are deactivated before activating the safety address. The safety address cannot be activated when one or more outputs are activated.

When you link multiple machines with DMX, we advise you to use the same Safety address for all machines.

⚠ CAUTION Always plug in a DMX Terminator into the DMX output of the final unit in the control sequence. Using a DMX Terminator improves signal reliability.

1.8 MERGED MODE

In merged mode, the ouputs are controlled together as one.

In merged mode the MAGICFX® FX-SWITCHPACK works with 1 safety address and 1 operational address. The Safety address cannot be the same as one of the operational addresses.

Operating the addresses in merged mode results in the following:

DMX Address	DMX Value (decimal)		Result
Safety address	0	99	Device disbaled
	100	154	Device enabled
	155	255	Device disabled
Start address	0	199	All outputs disabled
	200	255	All outputs enabled

Operation of the DMX addresses in merged mode

NOTICE Make sure the outputs are deactivated before activating the safety address. The safety address cannot be activated when one or more outputs are activated.

When you link multiple machines with DMX, we advise you to use the same Safety address for all machines.

⚠ CAUTION Always plug in a DMX Terminator into the DMX output of the final unit in the control sequence. Using a DMX Terminator improves signal reliability.

1.9 RDM CAPABILITY

Remote Device Management Protocol (RDM) is an enhancement of the DMX512 communication protocol. RDM can be used for configuration and status monitoring while DMX512 takes care of the default controlling.

For RDM you will need a RDM compatible controller and an RDM responder like the MAGICFX® FX-SWITCHPACK. You can activate or deactivate RDM in the menu, see section 1.5. The following RDM parameters are supported by the MAGICFX® FX-SWITCHPACK.

Parameter ID	Discovery	GET	SET
DISC_UNIQUE_BRANCH	X		
DISC_MUTE	X		
DISC_UN_MUTE	X		
DEVICE_INFO		X	
SUPPORTED_PARAMETERS		X	
SOFTWARE_VERSION_LABEL		X	
DEVICE_MODEL_DESCRIPTION		X	
MANUFACTURER_LABEL		X	
SLOT_DESCRIPTION		X	
DMX_PERSONALITY_DESCRIPTION		X	
DMX_START_ADDRESS		X	X
IDENTIFY_DEVICE		X	X
DEVICE_LABEL		X	X
FACTORY_DEFAULTS		X	X
DMX_PERSONALITY		X	X
DISPLAY_INVERT		X	X
RESET_DEVICE			X

RDM parameters

RDM parameters are subject of change due to software updates. Contact MAGIC FX for the latest information and updates.

2 SWITCH SAFELY!

The MAGICFX® FX-SWITCHPACK has been designed and constructed in such a manner that it can be used safely. This applies to the use, the circumstances and the regulations as described in this documentation. Reading this documentation and following the instructions are therefore necessary for everyone who is authorised to work with the MAGICFX® FX-SWITCHPACK.

The MAGICFX® FX-SWITCHPACK must be used in surroundings that:

- Have a stable temperature of between -10 and 50 °C.
- Have a relative humidity degree between 20% and 90 % (non condensing).
- Are free of dust, corrosive gases and high concentrations of organic vapours.
- Are not situated in the vicinity of a source of vibration.

2.1 GENERAL SAFETY RULES

- Only authorised persons may carry out work with the MAGICFX® FX-SWITCHPACK.
- Do not use the MAGICFX® FX-SWITCHPACK if there are people or animals in the direct output.
- Make sure that children, unauthorised people and animals do not obtain access to the MAGICFX® FX-SWITCHPACK.
- Make sure there are no freestanding objects or objects that can be damaged by the connected machines within the output distance.
- Do not remove any safeguards, safety caps and safety symbols.
- All required safety devices must be in good condition and function properly.
- Ensure sufficient lighting of the surroundings.
- Keep the workplace clean.
- Refer to the manual(s) of the connected machine(s) for safety instructions concerning the use of those machines.

2.2 RIGGING

Please follow the European and national guidelines for safe rigging and trussing.

2.3 CONNECTING FX-MACHINES

The voltage and frequency connected to the power input of the MAGICFX® FX-SWITCHPACK are also the voltage and frequency of the switchable power outputs. With a maximum electric current per switchable output (see Chapter 1.2 Technical Data), a deviating input voltage or frequency may cause connected FX-machines to not work properly. The switchable output cannot deliver the power the FX-machine might require.

2.4 PRECAUTIONS FOR OPERATION

⚠ WARNING Using a damaged or an improper installed switch can lead to death, serious injury or property damage. Always inspect the switch thoroughly before operation.

⚠ WARNING Unauthorized operation of the switch can lead to death, serious injury or property damage. Never leave the switch unattended when the machine is ready for use.

3 LET'S SWITCH!

3.1 INSTALL THE SWITCH

Place the switch in a suitable area.
This may either be on a stable surface or on a truss.

To mount the switch on a truss follow the instructions below:

1 Screw two clamps into the holes.

Use two M10 twenty clamps for truss mounting (product code MFX3103).

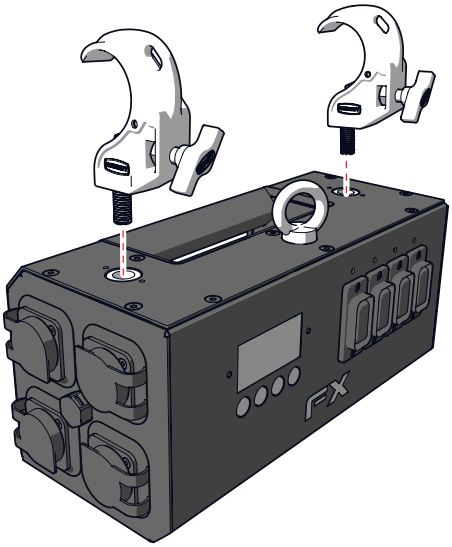

2 Mount the clamps firmly on a truss.

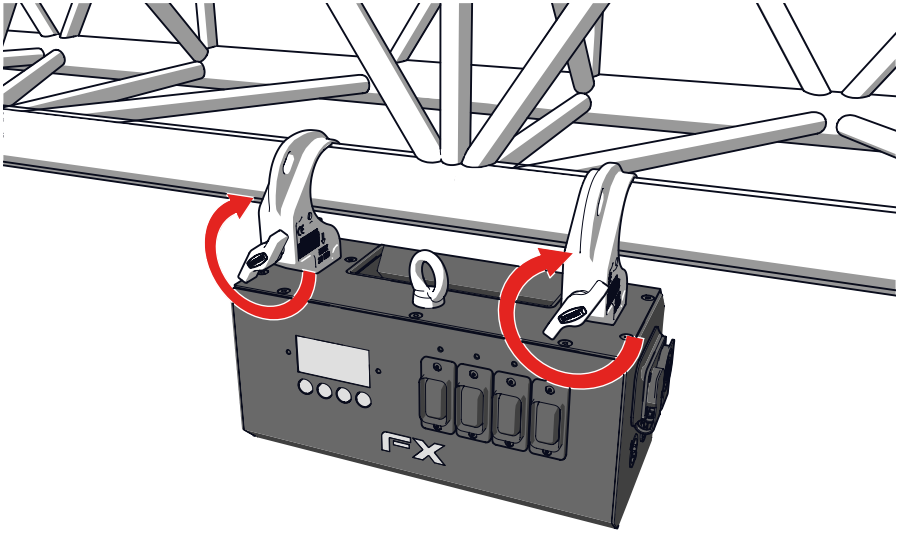

3 Secure the switch onto the truss with use of the safety eye.

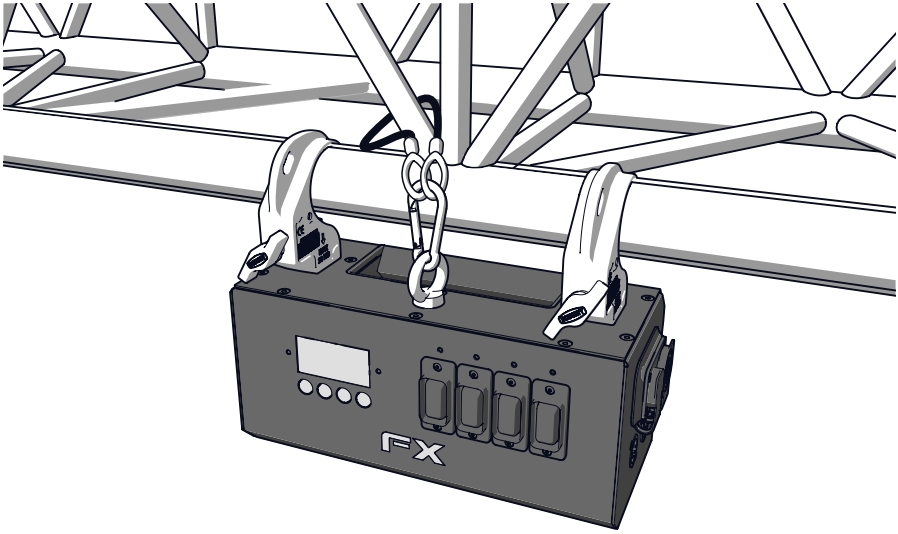

4 Inspect if the switch is mounted firmly and secured correctly.

3.2 CONNECT THE SWITCH

⚠ CAUTION Do not connect FX-machines to the switchable power output(s) when the output cannot deliver sufficient power to the FX-machine. See Chapter 1.

1 Connect the PowerCon TRUE1 power cable to the switch.

Connect the other end to a power outlet.

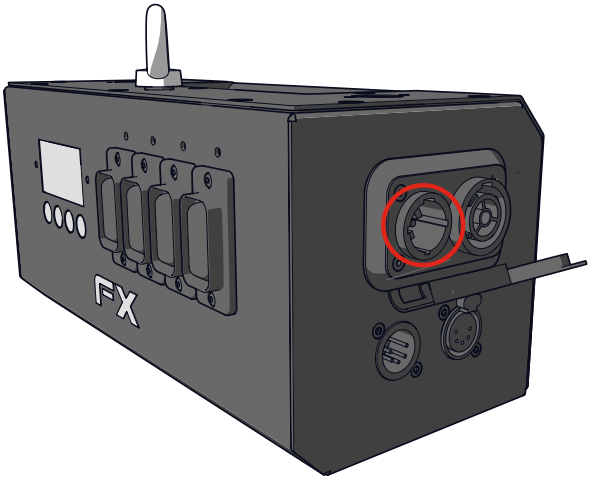

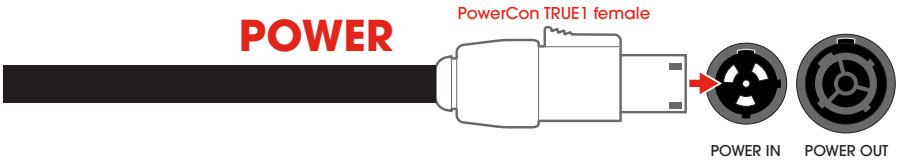

⚠ CAUTION Always plug in a DMX Terminator into the DMX output. Using a DMX Terminator improves signal reliability.

2 Connect the female connector of a 5-pole DMX cable to the DMX input on the switch.

Connect the other end to your DMX controller.

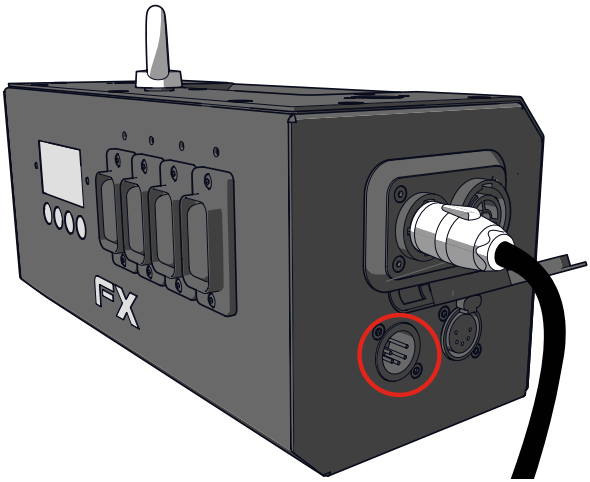

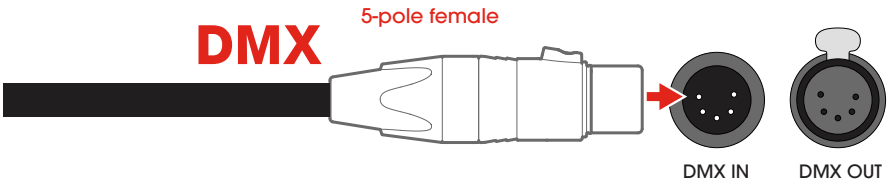

3 Make sure the resettable output fuses are in position '1'.

4 Check the LED output indicators to see if the outputs are activated.

If not: Connect the male connector of the PowerCon TRUE1 link cable(s) to your FX-machine(s).

Connect the other end(s) to the switched output(s) on the switch.

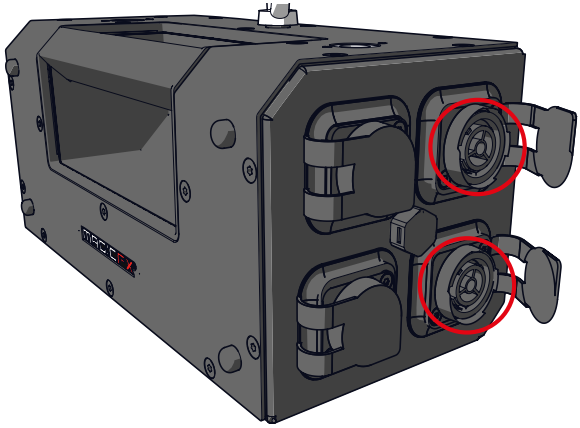

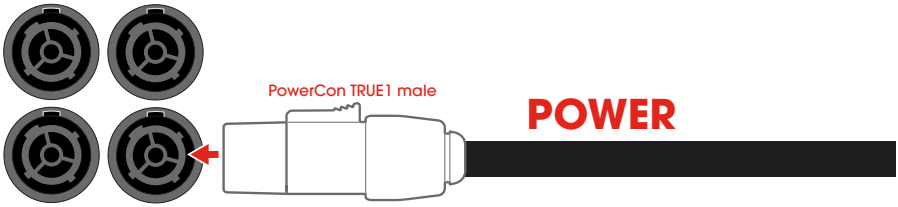

5 Use the display and buttons to set the machine into SEQUENCE, SEPARATE or MERGED mode and assign DMX addresses, see chapter 1 for more detail.

3.3 SWITCH WITH DMX

1. Before switching, refer to the manual(s) of your connected FX-machine(s) for safety instructions.
2. Make sure all outputs are deactivated.
3. Activate the Safety address. The FX LED indicator on the FX-SWITCHPACK lights up.
4. When it's time to switch, activate the necessary operational channel(s), see Chapter 1.
5. When you are done with switching, deactivate the operational addresses.
6. Deactivate the Safety address.

3.4 CLEAN UP

1. Make sure the Safety address is deactivated.
2. First disconnect the power cable from the FX-SWITCHPACK. Then disconnect the link cables and the DMX cable.
3. Remove the machine.

4 MAINTENANCE

To achieve the maximum service life of the MAGICFX® FX-SWITCHPACK you must regularly clean the MAGICFX® FX-SWITCHPACK and test if it is functioning correctly.

Contact MAGIC FX if the MAGICFX® FX-SWITCHPACK is not functioning correctly.

⚠ DANGER Do not replace parts yourself; always consult MAGIC FX.

5 TROUBLESHOOTING

Always contact MAGIC FX if any malfunctions or errors occur that cannot be solved with the instructions as described in this manual.

6 CORRECT DISPOSAL

This symbol on the product and / or accompanying documents means that used electrical and electronic products should not be mixed with general household waste. For proper treatment, recovery and recycling, please take this product to designated collection points where it will be accepted free of charge.

Alternatively, in some countries you may be able to return your products to your local retailer upon purchase of an equivalent new product.

Disposing of this product correctly will help save valuable resources and prevent any potential negative effects on human health and the environment, which could otherwise arise from inappropriate waste handling.

Please contact your local authority for further details of your nearest designated collection point.

Penalties may be applicable for incorrect disposal of this waste, in accordance with your national legislation.

7 EC DECLARATION OF CONFORMITY

MAGIC FX B.V. declares as manufacturer and composer of the technical construction file that the product with the following specifications:

Name machine	: FX-SWITCHPACK
Type	: MFX3211
Voltage	: 100-250Vac 50-60Hz
Serial number	: on product
Year of construction	: on product

Is in conformity with the minimal safety regulations as stated in the following directive(s):

- EMC (2014/30/EC) ElectroMagnetic Compatibility
- RoHS (2011/65/EU) Restriction of the use of certain Hazardous Substances
- WEEE (2012/19/EU) Waste Electrical & Electronic Equipment

The following harmonized standards were applied:

- NEN-EN-ISO 12100:2010, Safety of machinery - General principles for design - Risk assessment and risk reduction.
- NEN-EN-IEC 60204:2010, Safety of machinery - Electrical equipment of machines - Part 1: General requirements.
- NEN-EN-IEC 61000-6-3:2007/A1:2011, Electromagnetic compatibility (EMC) - Part 6-3: Generic standards - Emission standard for residential, commercial and light-industrial environments.

☐ Original declaration of conformity
☑ Translation of the original declaration of conformity

Name manufacturer	: MAGIC FX BV
Address	: Schouwrooij 27, 5281 RE BOXTEL
Country	: The Netherlands
CEO	: B. Veroude
Date	: 6-10-2017
Signature	:

MAGICFX®

WWW.MAGICFX.EU