USER AND INSTALLATION MANUAL

ENGLISH

MAG:CFX®

/CO2 JET II

CE

CO2 FX

PART01875

REV 01-03

DISCLAIMER

⚠ WARNING	Read this manual carefully before installing and/or using this product. Failure to read the manual and to follow the printed instructions may lead to personal injury and/or damage to the product.

© 2023 MAGICFX®

All rights reserved.

Nothing from this publication may be copied, reproduced and/or published by means of printing, photocopying or by any other means, without the prior written approval of MAGIC FX.

MAGIC FX reserves the right to modify specifications stated in this manual.

TRADEMARKS

Any brand names mentioned in this manual are registered trademarks of their respective owners.

LIABILITY

MAGIC FX accepts no liability for claims from third parties arising from unauthorised use, use other than that stated in this manual, and use other than in accordance with the General Conditions registered at the Chamber of Commerce.

We further refer to the General Conditions. These are available on request, free of charge.

Although considerable care has been taken to ensure a correct and comprehensive description of all relevant components, the manual may nonetheless contain errors and inaccuracies.

Should you detect any errors or inaccuracies in the manual, we would be grateful if you would inform us. This helps us to further improve our documentation.

TABLE OF CONTENT

Introduction		4
Language		4
Revision table		4
1.	**Description**	**5**
1.1.	Main parts	5
1.2.	Technical data	6
1.3.	Product identification	7
1.4.	Accessories	7
2.	**Safety**	**8**
2.1.	General safety rules	8
2.2.	CO2	8
2.3.	Indoor Use	9
2.4.	Rigging	9
2.5.	Noise Levels	9
2.6.	Safety symbols	9
2.7.	Safety warnings	10
3.	**Installation and use**	**11**
3.1.	Mount on a stage	11
3.2.	Mount on a truss	12
3.3.	Connect power	14
3.4.	Connect CO2	15
3.5.	Blast with DMX	17
3.6.	Clean up	18
4.	**Troubleshooting**	**20**
5.	**Maintenance**	**20**
6.	**Correct disposal**	**20**
7.	**EC Declaration of Conformity**	**21**

INTRODUCTION

Congratulations! You have bought a great new product from MAGIC FX.

This manual contains all information required for the intended use of the equipment. Deviation from the described intended use can result in a hazardous situation and/or property damage.

This manual includes notes and warnings on safe operation of the equipment. These notes and warnings are accompanied by the following icons. Read them attentively!

⚠ DANGER	Indicates a hazardous situation that, if not avoided, will result in death or serious injury. This signal word is to be limited to the most extreme situations.
⚠ WARNING	Indicates a hazardous situation that, if not avoided, could result in death or serious injury.
⚠ CAUTION	Indicates a hazardous situation that, if not avoided, could result in minor or moderate injury.
NOTICE	Indicates information considered important, but not hazard-related (e.g. messages relating to property damage).

LANGUAGE

This document contains the original instructions in English. In case you require other languages please contact MAGIC FX.

REVISION TABLE

Doc nr	Revision	Date	Description	Author	Approved
PART01875	01-00	01-06-2018	Initial release	SDO	TVA
PART01875	01-01	01-08-2019	Accessories changes, formatting changes	TFR	TVA
PART01875	01-02	25-09-2020	Accessories	NvE	LL
PART01875	01-03	24-11-2023	Preparing for CMS	MBO	WH

1. DESCRIPTION

The CO2 JET II is a special effects machine that blasts CO2 into the air.

The CO2 JET II is equipped with a CO2 powered rotating nozzle. A solenoid valve controls the supply of liquid CO2 to the nozzle. From the nozzle, the CO2 escapes through the output pipe. A blast of escaping CO2 is accompanied by a strong hissing sound and a white plume of fog will be visible from the output pipe. The output pipe with nozzle can be set in an angle.

The CO2 JET II is equipped with several holes for mounting of the unit to a stage or to a truss with a truss clamp and for attaching safety cables. Furthermore, the CO2 JET II is suited for simultaneous activation of multiple units by creating a power link.

1.1. MAIN PARTS

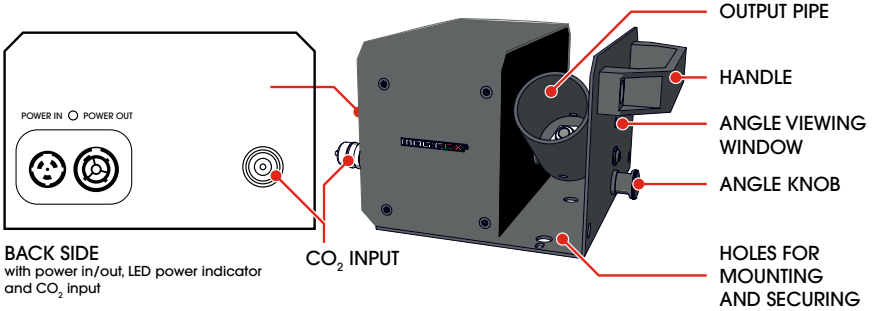

Main parts

1.2. TECHNICAL DATA

Product	Product Name	CO2 JET II	
	Product Code	MFX1118	
	Product Type	CO2 FX	
Main Dimensions	Length	232 mm	9.1 in
	Width	196 mm	7.7 in
	Height	124.5 mm	4.9 in
Weight	Empty Weight	3.7 kg	8.2 lbs
Package	Length	289 mm	11.4 in
	Width	289 mm	11.4 in
	Height	201 mm	7.9 in
	Packaged Weight	4.2 kg	9.3 lbs
Environment	Minimum Temperature	- 20 °C	- 4 °F
	Maximum Temperature	70 °C	158 °F
	Humidity (Relative)	20 to 90 % (non-condensing)	
Electrical	Voltage Input	220 - 240 VAC	
	Voltage Frequency	50 - 60 Hz	
	Power Consumption	20 W	
	Power Connector	Neutrik® powerCON TRUE1 (in&out)	
Controlling	Control Options	Direct output	
Usage	Propellant	Liquid CO2	
	Propellant Connector	CO2 Quick Connector 3/8”	
	Propellant Consumption	0.5 L/s	

Technical data

1.3. PRODUCT IDENTIFICATION

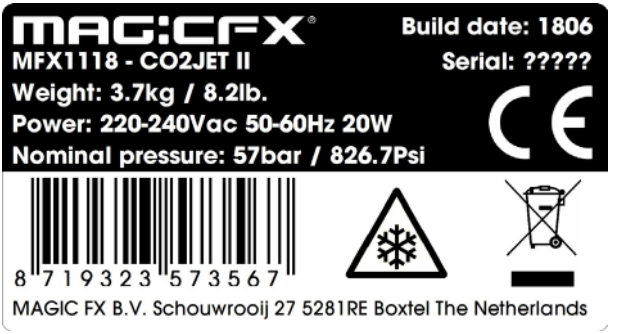

Type plate

1.4. ACCESSORIES

Code	Product	Included
MFX0305	MAGICFX® BASEPLATE II	
MFX1114	CO2 High Pressure Hose 3/8 Male - Female, 1.25 m	
MFX1105	CO2 High Pressure Hose 3/8 Male - Female, 2 m	
MFX1106	CO2 High Pressure Hose 3/8 Male - Female, 3 m	
MFX1121	CO2 High Pressure Hose 3/8 Male - Female, 5 m	
MFX1108	CO2 High Pressure Hose 3/8 Male - Female, 10 m	
MFX1109	CO2 High Pressure Hose 3/8 Male - Female, 15 m	
MFX1122	CO2 High Pressure Hose 3/8 Male - Female, 20 m	
MFX1110	CO2 90 Degrees Connector 3/8	
MFX1103	CO2 Bottle to Hose Connector	
MFX1115	CO2 Bottle to Hose Connector 90 Degrees	
MFX3103	Twenty Clamp (20 kg) M10	
SPR00119	Safety Steel	
SPR00972	Standard Nozzle	
SFX1137	Low Noise Spray Nozzle CO2	
MFX0313	Schuko to Neutrik® powerCON TRUE1 cable - 1.5 m	

Accessories

Please contact MAGIC FX for additional possibilities.

2. SAFETY

The CO2 JET II has been designed and constructed in such a manner that it can be used safely. This applies to the use, the circumstances and the regulations as described in this documentation. Reading this documentation and following the instructions are therefore necessary for everyone who is authorised to work with the CO2 JET II.

The CO2 JET II must be used in surroundings that:

- Have a reasonably stable temperature of between -20 and 70 °C;
- Have a relative humidity degree between 20 % and 90 % (non condensing);
- Are free of dust, corrosive gases and high concentrations of organic vapours.
- Are not situated in the vicinity of a source of vibration.

2.1. GENERAL SAFETY RULES

- Only authorised persons may work with the CO2 JET II;
- Do not use the CO2 JET II if there are people or animals in the direct output;
- Make sure that children, unauthorised people and animals do not obtain access to the CO2 JET II;
- Make sure there are no freestanding objects or objects that can be damaged by the CO2 JET II within the output distance.
- Do not connect more units to a single electrical circuit than the installed fuse is able to handle. (Calculate the summed load with the electrical data from Chapter 1);
- Do not remove or bypass any safeguards and safety symbols.
- All required safety devices must be in good condition and function properly;
- Ensure sufficient lighting of the surroundings;
- Keep the workplace clean.

2.2. CO2

The CO2 JET II uses liquid CO2 as input. The application of CO2 involves serious risks. Make sure that you are well informed on these risks before installation and/or operation. Always use approved CO2 cylinders, hoses and connections. Always consult your CO2 supplier for regulations and instructions on safe installation and use.

MAGIC FX is not liable for unsafe situations, accidents and damage that are the result of incorrect working with CO2 and CO2 cylinders.

⚠ **WARNING**	Inadequate installation and/or operation of a CO2 powered machine and CO2 cylinders can lead to death or serious injury. Always follow the instructions from this manual, from your CO2 supplier and from local authorities.

2.3. INDOOR USE

The CO2 JET II is designed for outdoor use and use in well-ventilated indoor spaces. When used indoors, make sure you take the necessary preparations. These preparations could include, but are not limited to:

- Consulting your CO2 supplier.
- Calculating the reduction of oxygen for the indoor space.
- Checking the location for spots where CO could accumulate and taking preventive actions.
- Installing CO2 monitoring devices that will warn for hazardous CO2 levels.

⚠ DANGER	Do not use the CO2 JET II in poor ventilated confined spaces. Exposure to high levels of CO2 can cause symptoms like headache, nausea, loss of consciousness or even death.

2.4. RIGGING

Please follow the European and national guidelines for safe rigging and trussing.

2.5. NOISE LEVELS

The environmental noise level measured at 1 m from the product is 122 dB(A). This level of noise is only reached during the short shooting instances. Therefore hearing protection is not necessary.

⚠ WARNING	Do not operate the CO2 JET II close to yourself or to others for a long period of time. If you experience any hearing loss or ringing in the ears, you should immediately stop using the unit.

2.6. SAFETY SYMBOLS

Symbol	Meaning	Position
	Read the manual carefully before use!	Front of the machine.

Safety symbols

2.7. SAFETY WARNINGS

⚠ WARNING	Using a damaged or an improper installed machine can lead to death, serious injury or property damage. Always inspect the machine thoroughly before operation.
⚠ WARNING	A poorly mounted machine will come loose when the machine blasts CO2. This can lead to death, serious injury and/or property damage. Always inspect if the machine is mounted firmly and correctly as according to the instructions in this manual.
⚠ WARNING	Missing or obscured safety symbols on the machine can lead to death or serious injury. Make sure all safety symbols are correctly in place, see section 2.6..

3. INSTALLATION AND USE

3.1. MOUNT ON A STAGE

1. Mount the MAGICFX® CO2JET II firmly on a stage.

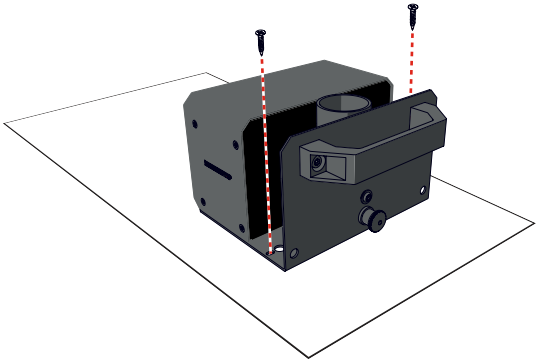

NOTICE	Optionally use a MAGICFX® BASEPLATE II for stage mounting.

2. Inspect if the MAGICFX® CO2JET II is mounted firmly.
3. Pull the angle knob and set the output pipe to the desired shooting angle. Release the angle knob to fasten the output pipe. Check if you hear a clicking sound and whether the output pipe is fastened correctly.

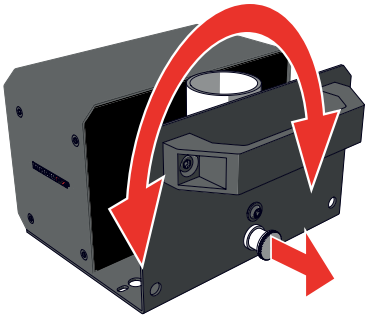

⚠ CAUTION	Make sure that the direct output will be free from persons and animals.
⚠ CAUTION	Make sure there are no freestanding objects or objects that can be damaged by the CO2 JET II within the output distance.

3.2. MOUNT ON A TRUSS

1. Flip the CO2 JET II upside down.

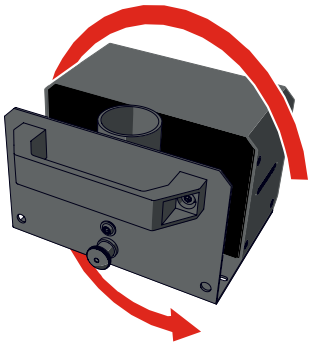

2. Screw a M10 twenty clamp for truss mounting (product code MFX3103) into both threaded holes.

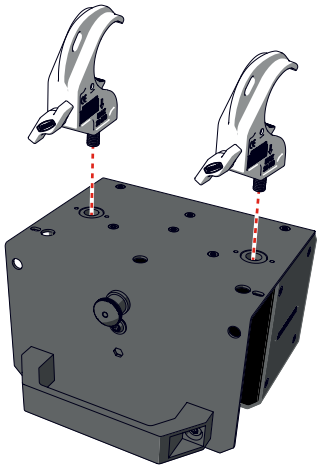

3. Mount the clamp firmly on a truss.

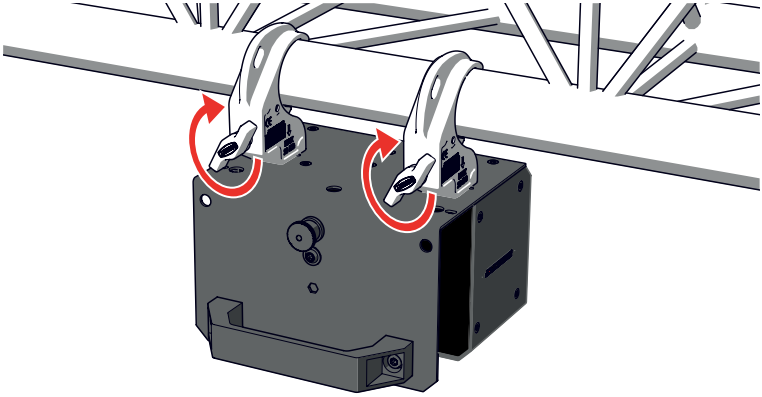

4. Secure the CO2 JET II onto the truss.

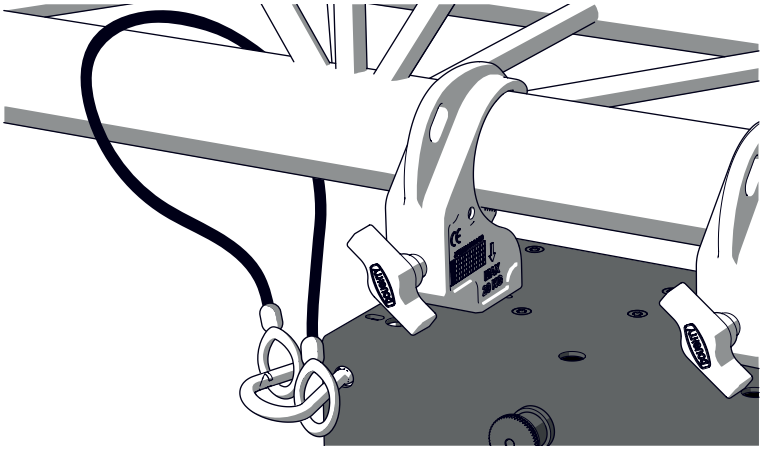

5. Inspect if the CO2 JET II is mounted firmly and secured correctly.

6. Pull the angle knob and set the output pipe to the desired shooting angle. Release the angle knob to fasten the output pipe. Check if you hear a clicking sound and whether the output pipe is fastened correctly.

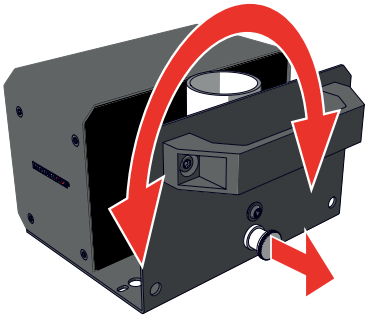

⚠ CAUTION	Make sure that the direct output will be free from persons and animals.
⚠ CAUTION	Make sure there are no freestanding objects or objects that can be damaged by the CO2 JET II within the output distance.

3.3. CONNECT POWER

1. Make sure that the power output on your controller or power switch is disabled.
2. Connect a power cable to the power input.

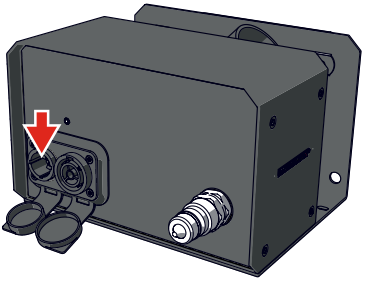

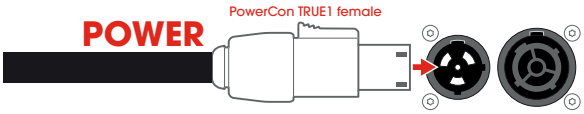

3. Connect the other end to your controller or power switch.

4. Optionally connect another machine to the power output with a power link cable.

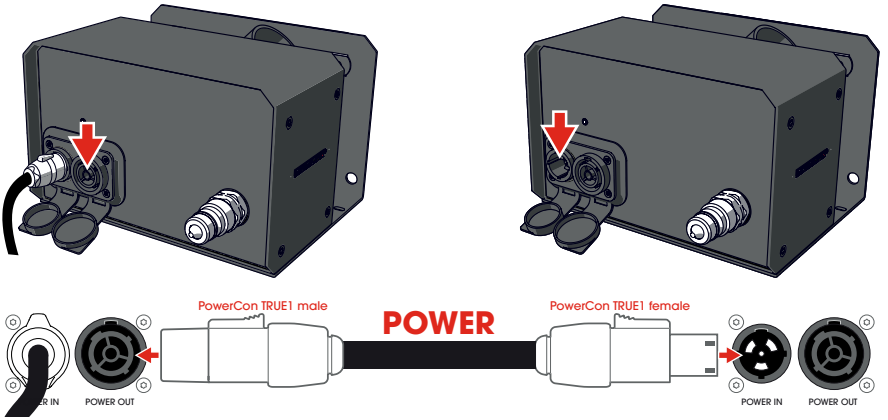

CAUTION Do not connect more units to a single electrical circuit than the installed fuse is able to handle. (Calculate the summed load with the electrical data from Chapter 1)

5. Switch the power on and check if the LED power indicator lights up. Check if you hear a clicking sound. If so, then the machine is working correctly.

CAUTION Make sure that the CO2 is not connected when testing the power.

3.4. CONNECT CO2

1. Make sure that the power is switched off (LED power indicator is off).
2. Connect the CO2 hose to the CO2 quick connector.

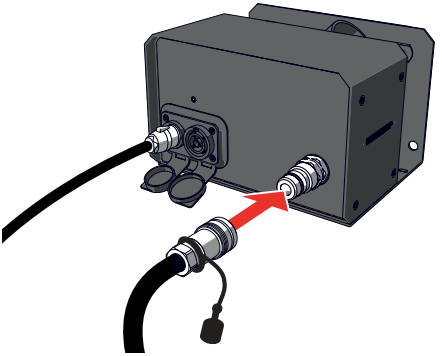

3. Connect a CO2 bottle-to-hose connector to a CO2 cylinder.

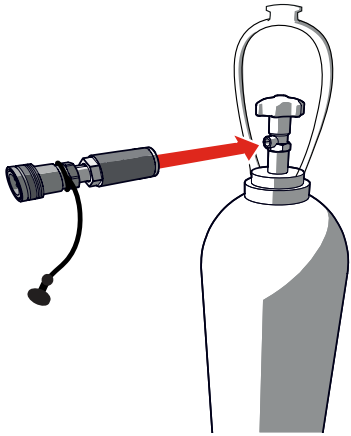

4. Connect the CO2 hose to the CO2 bottle-to-hose connector on the CO2 cylinder.

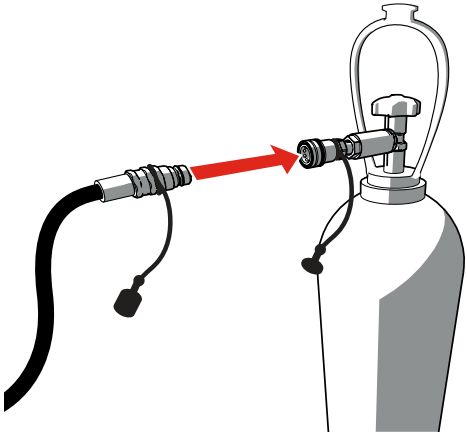

5. Open the CO2 cylinder.

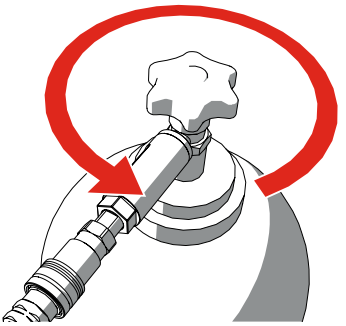

6. In case of multiple machines: Repeat steps 1 – 5 for each machine.

3.5. BLAST WITH DMX

1. Make sure that the direct output is free from persons, animals and objects.
2. When it's time to shoot, switch the power on.

⚠ CAUTION	Do not use the machine if the CO2 valve is not opening and closing correctly.

3. Enjoy the view!

4. Switch off the power.

3.6. CLEAN UP

1. Close the CO2 cylinder.

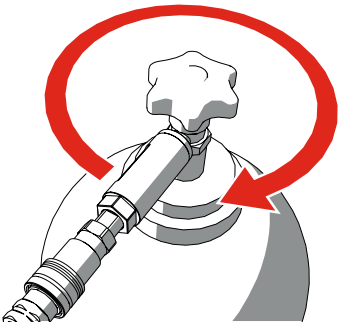

2. Switch the power on to release the remaining pressure.
3. Switch the power off and disconnect the power cable(s).
4. Disconnect the CO2 hose from the CO2 quick connector.

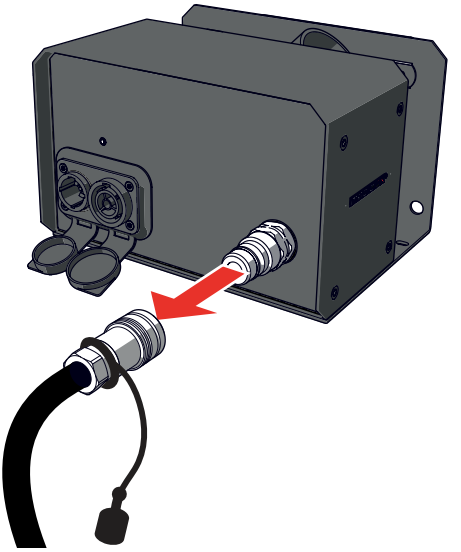

5. Disconnect the CO2 hose from the CO2 bottle-to-hose connector on the CO2 cylinder.

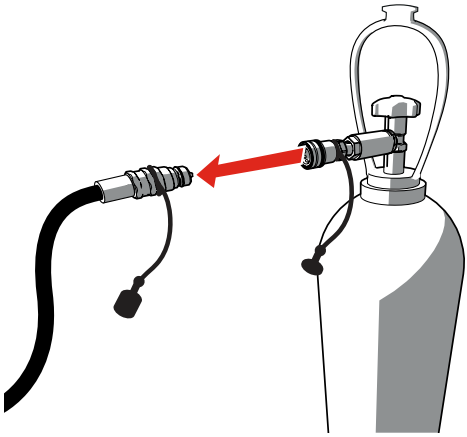

6. Remove the CO2 bottle-to-hose connector from the cylinder.

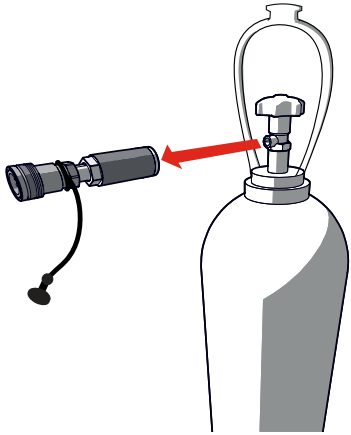

7. Dismount the machine.

4. TROUBLESHOOTING

Always contact MAGIC FX if any malfunctions or errors occur that cannot be solved with the instructions as described in this manual.

5. MAINTENANCE

To achieve the maximum service life of the CO2 JET II you must regularly clean the CO2 JET II and test if it is functioning correctly.

Contact MAGIC FX if the CO2 JET II is not functioning correctly.

⚠ DANGER	Do not replace parts yourself; always consult MAGIC FX if necessary.

6. CORRECT DISPOSAL

This symbol on the product and / or accompanying documents means that used electrical and electronic products should not be mixed with general household waste. For proper treatment, recovery and recycling, please take this product to designated collection points where it will be accepted free of charge. Alternatively, in some countries you may be able to return your products to your local retailer upon purchase of an equivalent new product. Disposing of this product correctly will help save valuable resources and prevent any potential negative effects on human health and the environment, which could otherwise arise from inappropriate waste handling. Please contact your local authority for further details of your nearest designated collection point. Penalties may be applicable for incorrect disposal of this waste, in accordance with your national legislation.

7. EC DECLARATION OF CONFORMITY

According to Annex III A Machinery Directive 2006/42/EC

MAGIC FX B.V. declares as manufacturer and composer of the technical construction file that the product with the following specifications:

Name machine	: CO2JETII
Type	: MFX1118
Voltage	: 220-240Vac 50/60Hz
Serial number	: on product
Year of construction	: on product

Is in conformity with the minimal safety regulations as stated in the following directive(s):

- LVD (2014/35/EU) Low Voltage Directive
- EMC (2014/30/EC) ElectroMagnetic Compatibility
- RoHS (2011/65/EU) Restriction of the use of certain Hazardous Substances
- WEEE (2012/19/EU) Waste Electrical & Electronic Equipment

The following harmonized standards were applied:

- NEN-EN-ISO 12100:2010 Safety of machinery - General principles for design - Risk assessment and risk reduction.
- NEN-EN-IEC 60204-1:2006, Safety of machinery - Electrical equipment of machines - Part 1: General requirements.
- NEN-EN-IEC 61000-6-3:2007/A1:2011, Electromagnetic compatibility (EMC) - Part 6-3: Generic standards - Emission standard for residential, commercial and light-industrial environments.
- NEN-EN-ISO 13732-3:2008, Ergonomics of the thermal environment - Methods for the assessment of human responses to contact with surfaces - Part 3: Cold surfaces

☐ Original declaration of conformity

☑ Translation of the original declaration of conformity

Name manufacturer	: MAGIC FX B.V.
Address	: Schouwrooij 27, 5281 RE BOXTEL
Country	: The Netherlands
CEO	: B. Veroude
Date	31-5-2018
Signature	

MAGICFX®

WWW.MAGICFX.EU