USER AND INSTALLATION MANUAL

ENGLISH

MAGICFX®

# /SWIRLFAN II.®

CE

CONFETTI FX

PART01661

rev 01-02

# DISCLAIMER

| | |
|---|---|
| **⚠ WARNING** | Read this manual carefully before installing and/or using this product. Failure to read the manual and to follow the printed instructions may lead to personal injury and/or damage to the product. |

© 2019 MAGICFX®
All rights reserved.

Nothing from this publication may be copied, reproduced and/or published by means of printing, photocopying or by any other means, without the prior written approval of MAGIC FX.

MAGIC FX reserves the right to modify specifications stated in this manual.

# TRADEMARKS

Any brand names mentioned in this manual are registered trademarks of their respective owners.

# LIABILITY

MAGIC FX accepts no liability for claims from third parties arising from unauthorised use, use other than that stated in this manual, and use other than in accordance with the General Conditions registered at the Chamber of Commerce.

We further refer to the General Conditions. These are available on request, free of charge.

Although considerable care has been taken to ensure a correct and comprehensive description of all relevant components, the manual may nonetheless contain errors and inaccuracies.

Should you detect any errors or inaccuracies in the manual, we would be grateful if you would inform us. This helps us to further improve our documentation.

# TABLE OF CONTENTS


| | | |
|---|---|---|
| Disclaimer | | 2 |
| Trademarks | | 2 |
| Liability | | 2 |
| Foreword | | 4 |
| Language | | 4 |
| Revision table | | 4 |
| 1 | Meet the MAGICFX® SWIRLFAN II! | 5 |
| 1.1 | Main parts | 5 |
| 1.2 | Technical data | 6 |
| 1.3 | Product identification | 6 |
| 1.4 | DMX control | 7 |
| 1.5 | Display panel | 7 |
| 1.6 | RDM capability | 10 |
| 1.7 | Accessories | 11 |
| 1.8 | Confetti | 11 |
| 2 | Swirl safely! | 12 |
| 2.1 | General safety rules | 12 |
| 2.2 | Indoor use | 12 |
| 2.3 | Rigging | 12 |
| 2.4 | Noise level | 12 |
| 2.5 | Safety symbols | 13 |
| 2.6 | Precautions for operation | 13 |
| 3 | Let's swirl! | 14 |
| 3.1 | Mount on a truss | 14 |
| 3.2 | (Re)Fill with confetti | 15 |
| 3.3 | Connect power and setup DMX | 16 |
| 3.4 | Setup multiple machines in a sequence with DMX | 17 |
| 3.5 | Swirl with DMX | 18 |
| 3.6 | Clean up | 19 |
| 4 | Maintenance | 20 |
| 5 | Troubleshooting | 20 |
| 6 | Correct disposal | 20 |
| 7 | EC Declaration of Conformity | 21 |

# FOREWORD

Congratulations! You have bought a great new product from MAGIC FX.

This manual contains all information required for the intended use of the equipment. Deviation from the described intended use can result in a hazardous situation and/or property damage.

This manual includes notes and warnings on safe operation of the equipment. These notes and warnings are accompanied by the following icons. Read them attentively!

| | |
|---|---|
| ⚠ DANGER | Indicates a hazardous situation that, if not avoided, will result in death or serious injury. This signal word is to be limited to the most extreme situations. |
| ⚠ WARNING | Indicates a hazardous situation that, if not avoided, could result in death or serious injury. |
| ⚠ CAUTION | Indicates a hazardous situation that, if not avoided, could result in minor or moderate injury. |
| NOTICE | Indicates information considered important, but not hazard-related (e.g. messages relating to property damage). |

# LANGUAGE

This document contains the original instructions in English. In case you require other languages please contact MAGIC FX.

# REVISION TABLE

| Document nr | Revision | Date | Description | Authored by | Checked by |
|---|---|---|---|---|---|
| PART01661 | 01-00 | 10-10-2019 | Initial release | CSK | SVG |
| PART01661 | 01-01 | 01-11-2019 | | CSK | SVG |
| PART01661 | 01-02 | 18-09-2020 | D.O.C. & Accessoires | NVE | LL |

# 1 MEET THE MAGICFX® SWIRLFAN II!

The MAGICFX® SWIRLFAN II is a special effects machines that can deliver a shower of confetti from above.

The MAGICFX® SWIRLFAN II can create a small confetti rain shower up to a confetti rain storm. It does this all silently thanks to its slow turning fan. The controllable speed of this fan doses the confetti thrown out the sides of the machine in a circular pattern.

Different types of confetti can be used in combination with the MAGICFX® SWIRLFAN II. Via two seperate lids in the top confetti is loaded into the machine. loading the MAGICFX SWIRLFAN II can be done either on the ground or while it is hanging in the truss.

The MAGICFX® SWIRLFAN II is delivered with 2 Quick Trigger Clamps. Use these to hang the machine to a truss, tube or other attachment points.

## 1.1 MAIN PARTS

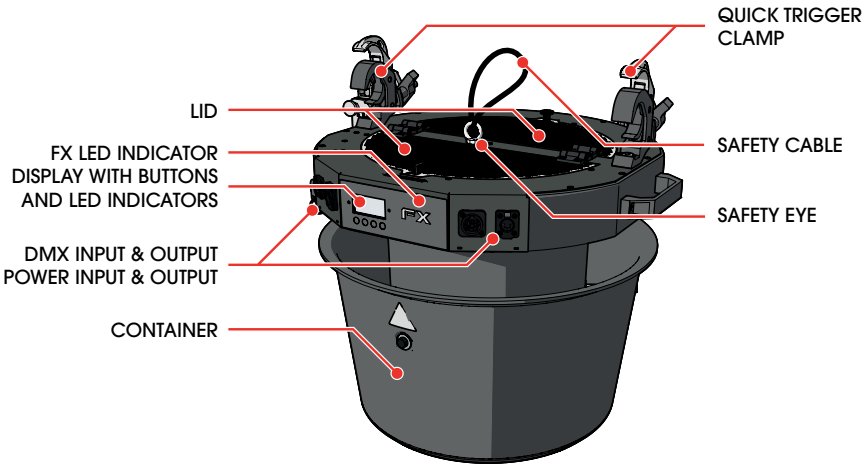


Main parts

## 1.2 TECHNICAL DATA

| | | | |
|---|---|---|---|
| **Product** | Product Name | MAGICFX® SWIRLFAN II | |
| | Product Code | MFX0703 | |
| | Product Type | CONFETTI FX | |
| **Main Dimensions** | Length | 550 mm | 21.7 in. |
| | Width | 604 mm | 23.8 in. |
| | Height | 618 mm | 24.3 in. |
| **Weight** | Empty weight | 19 kg | 41.9 lb. |
| **Electrical** | Voltage Input | 180 – 250 Vac | |
| | Voltage Frequency | 50 – 60 Hz | |
| | Power Consumption | 850 W | |
| | Power Connector | Neutrik® powerCON TRUE1 (in & out) | |
| **Environment** | Minimum Temperature | -10 °C | -14 °F |
| | Maximum Temperature | 50 °C | 122 °F |
| | Humidity (Relative) | 20% to 90% (non condensing) | |
| **Controlling** | Control options | DMX | |
| | Control protocols | DMX512-A (ANSI E1.11)<br>RDM (ANSI E1.20 | |
| | Control connectors | Neutrik 5-pole male/female XLR | |
| **Usage** | Consumable(s) | Confetti | |

Technical data

## 1.3 PRODUCT IDENTIFICATION

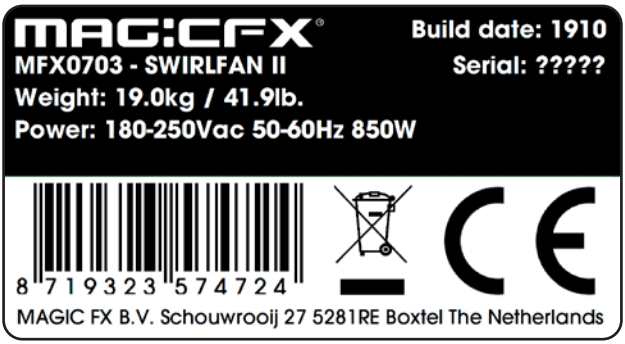


Type plate

## 1.4 DMX CONTROL

The MAGICFX® SWIRLFAN II is controlled with 1 safety adress and 1 operational address.

| DMX Address | Address range |
|---|---|
| Safety address | 1 – 255 |
| Start address (Effect density) | 1 – 255 |

DMX addresses

The safety address cannot be the same as the operational address. Operating of these addresses results in the following:

| DMX Address | DMX Value (decimal) | | Result |
|---|---|---|---|
| Safety address | 0 | 99 | Device disabled |
| | 100 | 154 | Device enabled |
| | 155 | 255 | Device disabled |
| Start address (Effect density) | 0 | 9 | No output |
| | 10 | 255 | Variable confetti output |

Operation of the DMX addresses

When you link multiple machines with DMX, we advise you to use the same Safety address for all machines.

**⚠ CAUTION** Always plug in a DMX Terminator into the DMX output of the final unit in the control sequence. Using a DMX Terminator improves signal reliability.

## 1.5 DISPLAY PANEL

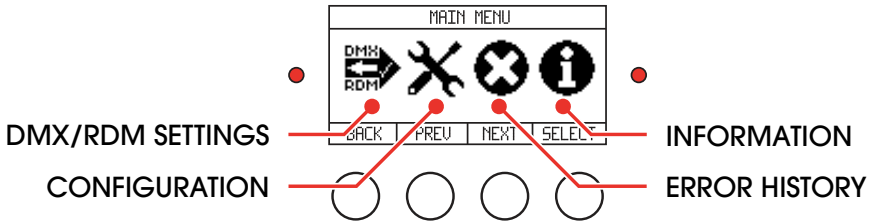


Display panel

The display panel is located on the backside of the MAGICFX® SWIRLFAN II. Check the following menu structure for all options in the menu. Use the buttons for navigation and selection. The left-hand LED blinks red when DMX is active. The right-hand LED continuously lights red when an error is present.

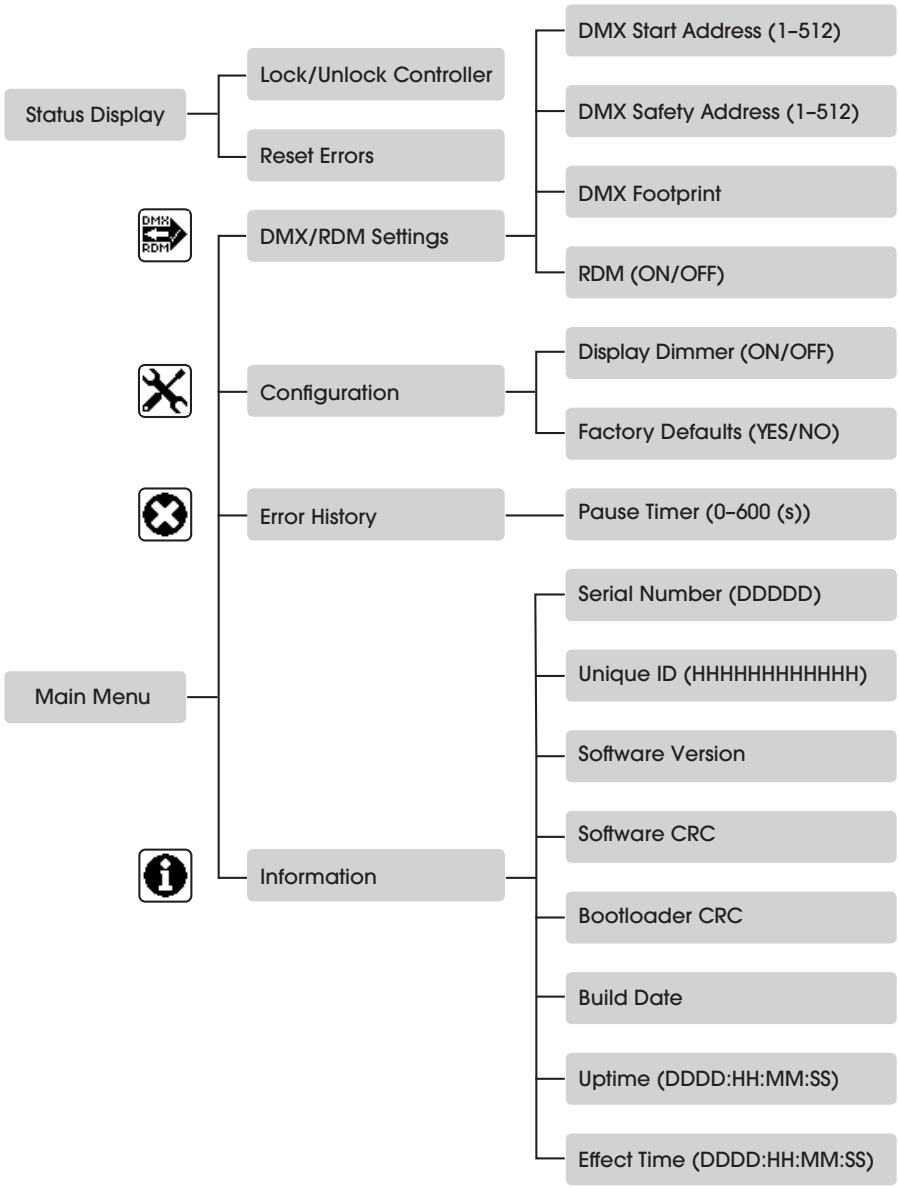
Main Menu
Status Display
Lock/Unlock Controller
Reset Errors
DMX/RDM Settings
DMX Start Address (1–512)
DMX Safety Address (1–512)
DMX Footprint
RDM (ON/OFF)
Configuration
Display Dimmer (ON/OFF)
Factory Defaults (YES/NO)
Error History
Pause Timer (0–600 (s))
Information
Serial Number (DDDDD)
Unique ID (HHHHHHHHHHHH)
Software Version
Software CRC
Bootloader CRC
Build Date
Uptime (DDDD:HH:MM:SS)
Effect Time (DDDD:HH:MM:SS)

| Menu function | Explanation |
|---|---|
| Lock/Unlock Controller | Holding the Lock button for more than 5 seconds will “lock” the display functions. Meaning buttons will not respond. This to avoid accidental change of parameters via display.To unlock, hold the Unlock button for more than 5 seconds. |
| Reset Errors | In case there is a locking error present, this button will reset the appliance. If the fault does not persist, the locking error will not reappear. |
| DMX Start Address (1-512) | Setting the DMX start address. |
| DMX Safety Address (1-512) | Setting the DMX safety address. |
| DMX Footprint | This parameter indicates the DMX footprint, in other words the amount of sequential channels used by the appliance. This does not include the safety channel. |
| Display Dimmer (On/Off) | Turn display dimmer on or off. If turned on, the display is dimmed automatically 30 seconds after the last button push. |
| Factory Defaults (Yes/ No) | Restores the appliance factory default settings. |
| Type (Alarm/ Error) | Toggle between the occured locking error (Alarm) list, and blocking error (Error) list. Locking errors need intervention by user, although they are “auto-reset” 3 times before the appliance remains in error until reset by user. Blocking errors clear when the triggering fault disappears. 16 locked, and 16 blocked errors are logged. Top of the list shows the last occurring error. |
| Serial Number (DDDDD) | Appliance serial number as also printed on the appliance label. |
| Unique ID (HHHHHHHHHHHH) | UID number as the appliance appears in the RDM device list after running discovery. |
| Software Version | Installed software version. |
| Software CRC | CRC of the functional software. |
| Bootloader CRC | CRC of the bootloader software. |
| Build Date | Release date of functional software. |
| Up-Time (DDDD:HH:MM:SS) | Time counter which indicates how long the appliance has been powered in total. |
| Effect-Time (DDDD:HH:MM:SS) | Time counter which indicates how long the effect has been activated in total. |

## 1.6 RDM CAPABILITY

Remote Device Management Protocol (RDM) is an enhancement of the DMX512 communication protocol. RDM can be used for configuration and status monitoring while DMX512 takes care of the default controlling.

For RDM you will need a RDM compatible controller. The following RDM parameters are supported by the MAGICFX® SWIRLFAN II.

| Parameter ID | Discovery | GET | SET |
|---|---|---|---|
| DISC_UNIQUE_BRANCH | X | | |
| DISC_MUTE | X | | |
| DISC_UN_MUTE | X | | |
| DEVICE_INFO | | X | |
| SUPPORTED_PARAMETERS | | X | |
| SOFTWARE_VERSION_LABEL | | X | |
| DEVICE_MODEL_DESCRIPTION | | X | |
| MANUFACTURER_LABEL | | X | |
| SLOT_DESCRIPTION | | X | |
| SENSOR_DEFINTION | | X | |
| SENSOR_VALUE | | X | |
| DMX_START_ADDRESS | | X | X |
| IDENTIFY_DEVICE | | X | X |
| DEVICE_LABEL | | X | X |
| FACTORY_DEFAULTS | | X | X |
| RESET_DEVICE | | | X |

RDM parameters

RDM parameters are subject of change due to software updates. Contact MAGIC FX for the latest information and updates.

## 1.7 ACCESSORIES

| Code | Product | Included |
|---|---|---|
| MFX0313 | SCUKO TO NEUTRIK® POWERCON TRUE1 - CABLE 1.5m | |
| SPR00119 | SAFETY STEEL 60 cm - 25 kg | |
| MFX0704 | FLIGHTCASE MAGICFX® SWIRLFAN II | |
| MFX3104 | QUICK TRIGGER CLAMP (100 kg) M10 | 2x |

Accessories

Please contact MAGIC FX for additional possibilities.

## 1.8 CONFETTI

**⚠ CAUTION** Make sure the fan blades of the MAGICFX® SWIRLFAN II can rotate freely while loaded with confetti.

The maximum payload depends on the type of confetti used. Check the following table.

| Type | Max. load |
|---|---|
| MAGICFX® PAPER CONFETTI 55 x 17 mm | 2 kg |
| MAGICFX® METALLIC CONFETTI 55 x 17 mm | 3 kg |

Confetti types and related load

| | |
|---|---|
| **NOTICE** | The output density of the confetti depends on multiple factors, such as the set DMX value, the kind of confetti used and the height of the machine. |

# 2 SWIRL SAFELY!

The MAGICFX® SWIRLFAN II has been designed and constructed in such a manner that it can be used safely. This applies to the use, the circumstances and the regulations as described in this documentation. Reading this documentation and following the instructions are therefore necessary for everyone who works with the MAGICFX® SWIRLFAN II.

The MAGICFX® SWIRLFAN II must be used in surroundings that:

- Have a stable temperature of between -10 and 50°C.
- Have a relative humidity degree between 20% and 90% (non condensing).
- Are free of dust, corrosive gases and high concentrations of organic vapours.
- Are not situated in the vicinity of a source of vibration.

## 2.1 GENERAL SAFETY RULES

- Only authorised persons may work with the MAGICFX® SWIRLFAN II.
- Make sure that children, unauthorised people and animals do not obtain access to the MAGICFX® SWIRLFAN II.
- Do not remove any safeguards, safety caps and safety symbols.
- All required safety devices must be in good condition and function properly.
- Ensure sufficient lighting of the surroundings.
- Keep the workplace clean.

## 2.2 INDOOR USE

The MAGICFX® SWIRLFAN II is designed for indoor use.

## 2.3 RIGGING

Please follow the European and national guidelines for safe rigging and trussing.

## 2.4 NOISE LEVEL

The environmental noise level as measured at the ear is 68 dB(A). Therefore hearing protection is not necessary.

## 2.5 SAFETY SYMBOLS

| Symbol | Meaning | Position |
|---|---|---|
| | Read the manual carefully before use! | Front of the machine |
| | Rotating parts, risk of pinch! | Front of the machine<br>Side of the machine<br>Back of the machine |

Safety symbols

## 2.6 PRECAUTIONS FOR OPERATION

| | |
|---|---|
| ⚠ WARNING | Using a damaged or an improper installed machine can lead to death, serious injury or property damage. Always inspect the machine thoroughly before operation. |

| | |
|---|---|
| ⚠ WARNING | Missing or obscured safety symbols on the machine can lead to death, serious injury or property damage. Make sure all safety symbols are correctly in place and visible, see Section 2.6. |

| | |
|---|---|
| ⚠ WARNING | Make sure the fan is not rotating and the power cable(s) are disconnected. Removing confetti residues when the fan is rotating can lead to serious injury. |

# 3 LET'S SWIRL!

## 3.1 MOUNT ON A TRUSS

**1** Bring the MAGICFX® SWIRLFAN II to the desired location.

**2** Mount the clamps firmly on a truss.

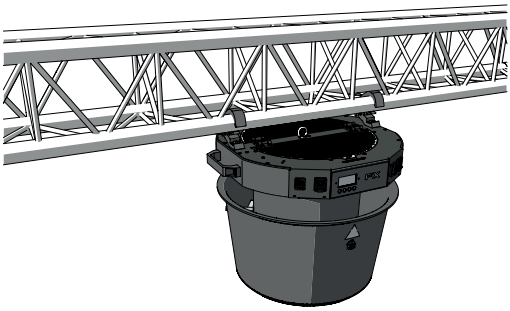

**3** Make sure to use the safety steel to secure the machine to the truss. The safety steel can be attached to the safety eye on top of the machine.

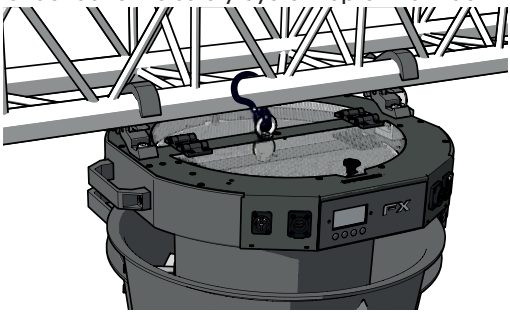

**4** Inspect if the MAGICFX® SWIRLFAN II is mounted firmly and secured correctly.

**5** Inspect the machine and remove any foreign objects and material that will block or obscure the opening around and/or the air inlets of the machine during operation.

## 3.2 (RE)FILL WITH CONFETTI

**1** Open the lid of the MAGICFX® SWIRLFAN II.

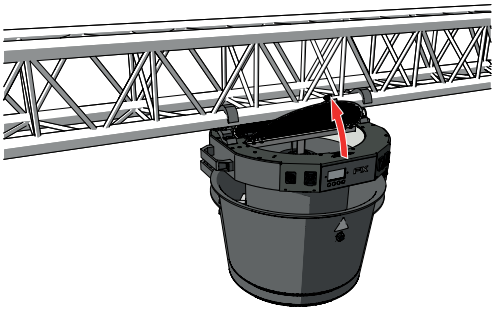

**2** Fill the container with confetti by hand.

**⚠ WARNING** Make sure the fan is not rotating and the power cable(s) are disconnected. Removing confetti residues when the fan is rotating can lead to serious injury.

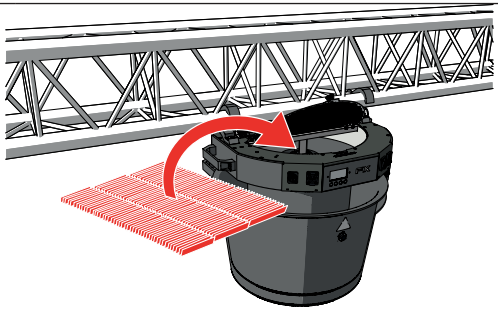

**3** Close the lid of the MAGICFX® SWIRLFAN II.

## 3.3 CONNECT POWER AND SETUP DMX

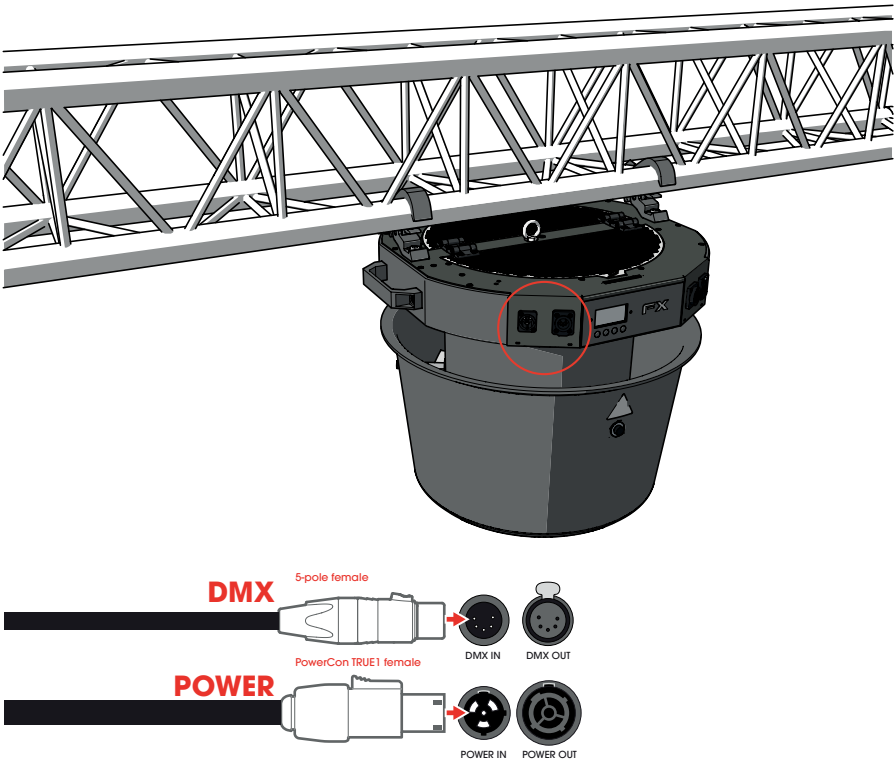


1. Connect a power cable with a Powercon TRUE1 Female connector to the power input.
2. Connect the other end of the power cable to a 180 – 250 Vac (50 – 60 Hz) power source.
3. Connect the female connector of a 5-pole DMX cable to the DMX input.
4. Connect the other end of the DMX cable to your DMX controller.
5. Power up the machine.
6. Use the display and buttons or a RDM controller to assign DMX addresses, see Chapter 1.
7. Optionally see Section 3.7 for adding more machines to the same sequence.

**⚠ CAUTION** Always plug in a DMX Terminator into the DMX output. Using a DMX Terminator improves signal reliability.

## 3.4 SETUP MULTIPLE MACHINES IN A SEQUENCE WITH DMX

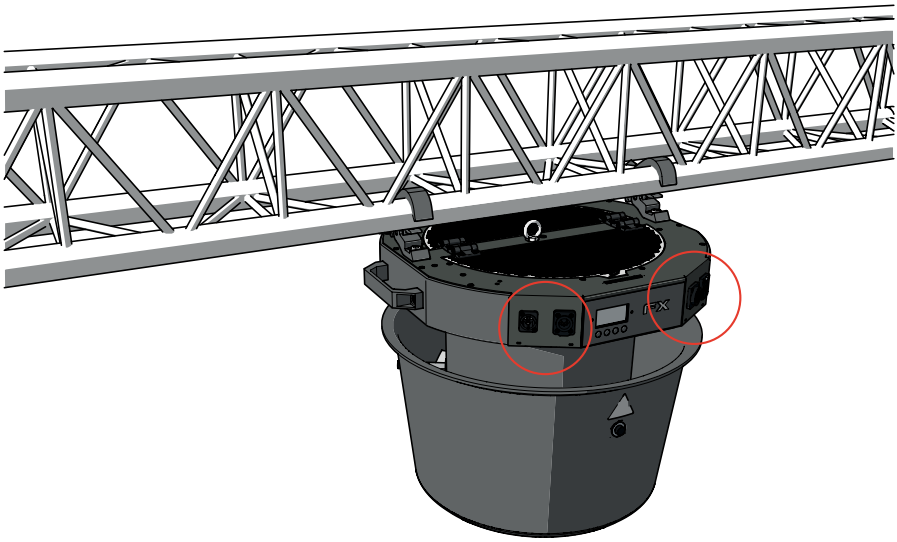

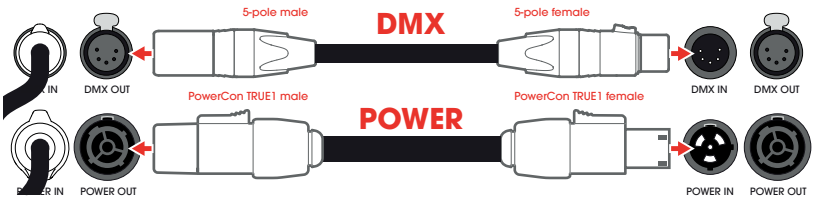


1. Connect a power link cable to the power output.
2. Connect the other end to the power input of the next machine.
3. Connect a DMX cable to the DMX output.
4. Connect the other end to the DMX input of the next machine.
5. Power up the machine.
6. Use the buttons or a RDM controller to assign DMX addresses, see Chapter 1.
7. Repeat step 1 – 5 for each subsequent machine.

**⚠ CAUTION** Always plug in a DMX Terminator into the DMX output of the final unit in the control sequence. Using a DMX Terminator improves signal reliability.

## 3.5 SWIRL WITH DMX

1. Activate the safety address. The FX LED indicator on the machine lights up.
2. When it's time to fill the air with confetti, set the DMX value for the density between 10 and 255.
3. If desired, vary the effect density during operation.
4. Enjoy the view!

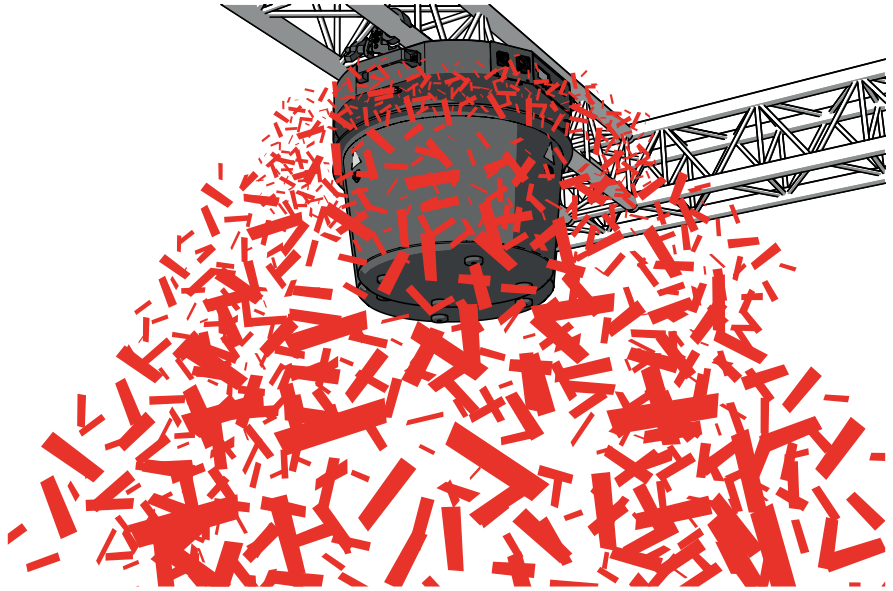

5. Deactivate the density address to stop blasting confetti.
6. Deactivate the safety address. The FX LED indicator on each machine dims.

## 3.6 CLEAN UP

1. Deactivate the safety address. The FX LED indicator on the machine dims.
2. Disconnect the machine from the power source.
3. Disconnect all DMX and power cable(s).
4. Remove any confetti residues from the machine and surroundings.

**⚠ WARNING** Make sure the fan is not rotating and the power cable(s) are disconnected. Removing confetti residues when the fan is rotating can lead to serious injury.

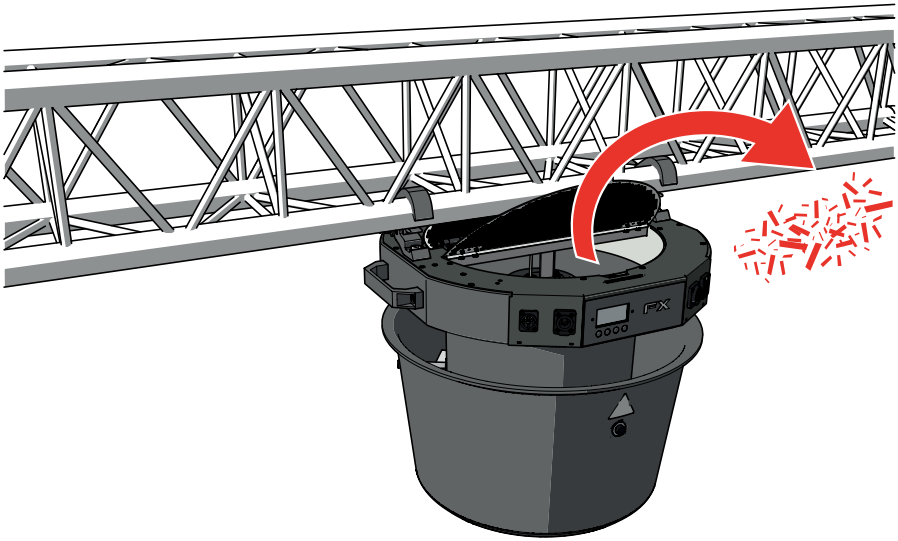


5. Unmount the machine if necessary.

# 4 MAINTENANCE

To achieve the maximum service life of the MAGICFX® SWIRLFAN II you must regularly clean the MAGICFX® SWIRLFAN II and test if it is functioning correctly.

Contact MAGIC FX if the MAGICFX® SWIRLFAN II is not functioning correctly.

**⚠ DANGER** Do not replace parts yourself; always consult MAGIC FX if necessary.

# 5 TROUBLESHOOTING

Always contact MAGIC FX if any malfunctions or errors occur that cannot be solved with the instructions as described in this manual.

# 6 CORRECT DISPOSAL

This symbol on the product and/or accompanying documents means that used electrical and electronic products should not be mixed with general household waste. For proper treatment, recovery and recycling, please take this product to designated collection points where it will be accepted free of charge.

Alternatively, in some countries you may be able to return your products to your local retailer upon purchase of an equivalent new product.

Disposing of this product correctly will help save valuable resources and prevent any potential negative effects on human health and the environment, which could otherwise arise from inappropriate waste handling.

Please contact your local authority for further details of your nearest designated collection point.

Penalties may be applicable for incorrect disposal of this waste, in accordance with your national legislation.

# 7 EC DECLARATION OF CONFORMITY

According to Annex III A Low Voltage Directive 2014/35/EU

MAGIC FX B.V. declares as manufacturer and composer of the technical construction file that the product with the following specifications:

| | |
|---|---|
| Name machine | : SWIRLFAN II |
| Type | : MFX0703 |
| Voltage | : 180-250 Vac 50-60 Hz |
| Serial number | : on product |
| Year of construction | : on product |

Is in conformity with the minimal safety regulations as stated in the following directive(s):

- LVD (2014/35/EU) Low Voltage Directive
- EMC (2014/30/EC) ElectroMagnetic Compatibility
- RoHS (2011/65/EU) Restriction of the use of certain Hazardous Substances
- WEEE (2012/19/EU) Waste Electrical & Electronic Equipment

The following harmonized standards were applied:

- NEN-EN-ISO 12100:2010 Safety of machinery - General principles for design - Risk assessment and risk reduction.
- NEN-EN-IEC 60204-1:2018, Safety of machinery - Electrical equipment of machines - Part 1: General requirements
- NEN-EN-IEC 61000-6-3:2007/A1:2011/C11:2012, Electromagnetic compatibility (EMC) - Part 6-3: Generic standards - Emission standard for residential, commercial and light-industrial environments.

☐ Original declaration of conformity
☑ Translation of the original declaration of conformity

| | |
|---|---|
| Name manufacturer | : MAGIC FX BV |
| Address | : Schouwrooij 27, 5281 RE BOXTEL |
| Country | : The Netherlands |
| CEO | : B. Veroude |
| Date | : 18-9-2020 |
| Signature | : |

MAGICFX®

WWW.MAGICFX.EU