ENGLISH

MAGICFX®

USER AND INSTALLATION MANUAL

STAGE, STADIUM & X-TREME SHOT

CE

CONFETTI & STREAMER FX

PART01339 rev 01-04

DISCLAIMER

⚠ **WARNING**	Read this manual carefully before installing and/or using this product. Failure to read the manual and to follow the printed instructions may lead to personal injury and/or damage to the product.

© 2025 MAGICFX®

All rights reserved.

Nothing from this publication may be copied, reproduced and/or published by means of printing, photocopying or by any other means, without the prior written approval of MAGIC FX.

MAGIC FX reserves the right to modify specifications stated in this manual.

TRADEMARKS

Any brand names mentioned in this manual are registered trademarks of their respective owners.

LIABILITY

MAGIC FX accepts no liability for claims from third parties arising from unauthorised use, use other than that stated in this manual, and use other than in accordance with the General Conditions registered at the Chamber of Commerce.

We further refer to the General Conditions. These are available on request, free of charge.

Although considerable care has been taken to ensure a correct and comprehensive description of all relevant components, the manual may nonetheless contain errors and inaccuracies.

Should you detect any errors or inaccuracies in the manual, we would be grateful if you would inform us. This helps us to further improve our documentation.

TABLE OF CONTENT

Introduction		4
Target group		4
Language		4
Abbreviations		5
Revision table		5
1.	**Description**	**6**
1.1.	Main parts	6
1.2.	STAGE SHOT II	7
1.3.	STADIUM SHOT II	9
1.4.	X-TREME SHOT	11
2.	**Safety**	**13**
2.1.	General safety rules	13
2.2.	Transport	13
2.3.	Compressed air	14
2.4.	Outdoor use	14
2.5.	Rigging	14
2.6.	Noise levels	14
2.7.	Confetti & Streamers	14
2.8.	Safety symbols	15
2.9.	Safety warnings	15
2.10.	Safety zones	16
3.	**Installation and use**	**18**
3.1.	Install the machine	18
3.2.	Connect power	23
3.3.	Run a test	25
3.4.	Fill with confetti and/or streamers	25
3.5.	Fill with pressurised air	27
3.6.	Let's shoot!	28
3.7.	Clean up	28
4.	**Troubleshooting**	**32**
5.	**Maintenance**	**32**
6.	**Correct disposal**	**32**
7.	**EC Declaration of Conformity**	**33**

INTRODUCTION

Congratulations! You have bought a great new product from MAGIC FX.

This manual contains all information required for the intended use of the equipment. Deviation from the described intended use can result in a hazardous situation and/or property damage.

This manual includes notes and warnings on safe operation of the equipment. These notes and warnings are accompanied by the following icons. Read them attentively!

⚠ **DANGER**	Indicates a hazardous situation that, if not avoided, will result in death or serious injury. This signal word is to be limited to the most extreme situations.
⚠ **WARNING**	Indicates a hazardous situation that, if not avoided, could result in death or serious injury.
⚠ **CAUTION**	Indicates a hazardous situation that, if not avoided, could result in minor or moderate injury.
NOTICE	Indicates information considered important, but not hazard-related (e.g. messages relating to property damage).

TARGET GROUP

This manual is targeted at authorised personnel in the event industry that install and operate the STAGE SHOT II, STADIUM SHOT II and X-TREME SHOT.

Authorised personnel are those who:

- Are appointed by their supervisor to install and/or operate the STAGE SHOT II, STADIUM SHOT II and X-TREME SHOT.
- Are trained in recognizing and avoiding hazards related to SFX applications at events.
- Are familiar with and abide by the applicable local, national and international laws and regulations.

LANGUAGE

This document contains the original instructions in English. In case you require other languages please contact MAGIC FX.

ABBREVIATIONS

Abbreviation	Description
SFX	Special effects
DMX	Digital Multiplex
RDM	Remote Device Management
STAGE SHOT II	MAGICFX® STAGE SHOT II
STADIUM SHOT II	MAGICFX® STADIUM SHOT II
X-TREME SHOT	MAGICFX® X-TREME SHOT

Abbreviations

REVISION TABLE

Doc nr	Revision	Date	Description	Author	Approved
PART01339	01-00	29-08-2017	Initial release	TFR	TVA
PART01339	01-01	01-08-2019	A4 to A5 format	TFR	TVA
PART01339	01-02	03-12-2019	Updated safety zones	CSK	WBO
PART01339	01-03	24-09-2020	Changed accessoires	NvE	LL
PART01339	01-04	27-01-2025	Updated safety zones Updated front page	MBO	SvdS

1. DESCRIPTION

The STAGE SHOT II is a special effects machine that shoots confetti loads up to 1 kg 10 metres far* and 12 polybags of streamers 20 metres far*. The STAGE SHOT II is equipped with a 17.7 litre air pressure tank and is intended for outdoor use.

The STADIUM SHOT II is a special effects machine that shoots confetti loads up to 4 kg 20 metres far* and 8 – 25 polybags of streamers 25 – 40 metres far*. The STADIUM SHOT II is equipped with a 36 litre air pressure tank and is intended for outdoor use.

The X-TREME SHOT is a special effects machine that shoots confetti loads up to 8 kg 30 metres far* and 15 – 25 polybags of streamers 25 – 40 metres far*. The X-TREME SHOT is equipped with a 68 litre air pressure tank and is intended for outdoor use.

In this manual the STAGE SHOT II, STADIUM SHOT II & X-TREME SHOT are all referred to as 'the machine'.

* The output distance depends on input material, air pressure and environmental conditions.

1.1. MAIN PARTS

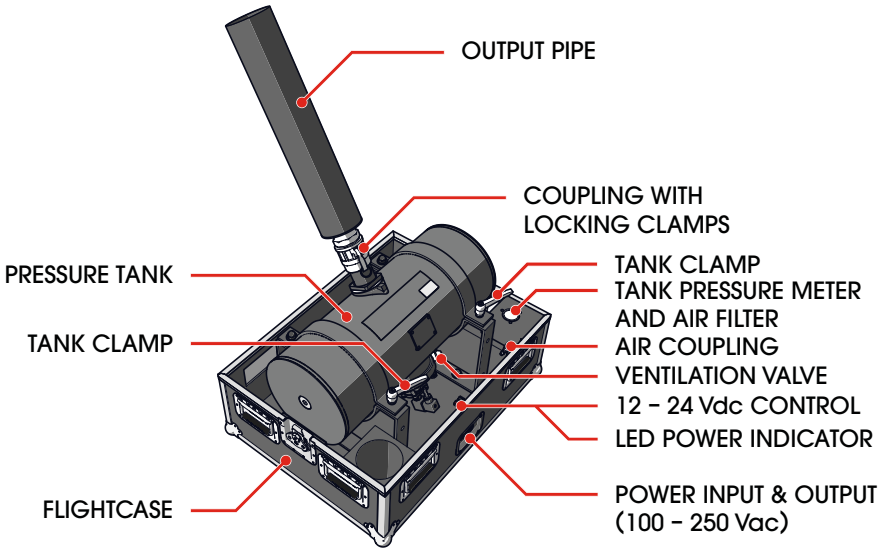

Main parts

1.2. STAGE SHOT II

1.2.1. TECHNICAL DATA

Product	Product Name	STAGE SHOT II	
	Product Code	MFX0410II	
	Product Type	CONFETTI & STREAMER FX	
Main Dimensions	Length	590 mm	23.2 in
	Width	450 mm	17.7 in
	Height	750 mm	29.5 in
Weight	Weight	71 kg	156.5 lb
Environment	Minimum Temperature	- 10 °C	14 °F
	Maximum Temperature	70 °C	158 °F
	Humidity (Relative)	20 to 90 % (non-condensing)	
Electrical	Voltage Input (Vac)	100 - 250 Vac	
	Voltage Frequency	50 - 60 Hz	
	Power Consumption (Vac)	20 W	
	Power Connector (Vdc)	Banana Plug & Wire	
	Power Connector (Vac)	Neutrik® powerCON TRUE1 (in&out)	
	Voltage Input (Vdc)	12 - 24 Vdc	
Pressure tank	Maximum Pressure	8 bar	116 psi
	Volume	17.7 L	
Usage	Consumable(s)	Confetti & Streamers	

Technical data of the STAGE SHOT II

1.2.2. PRODUCT IDENTIFICATION

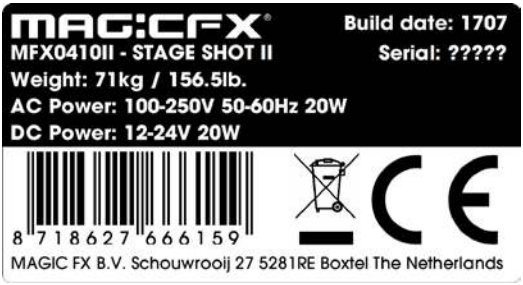

Type plate of the STAGE SHOT II

1.2.3. ACCESSORIES

Code	Product	Included
MFX0313	Schuko to Neutrik® powerCON TRUE1 cable - 1.5 m	X
MFX0404	Compression caps tape 50 m x 50 mm	
MFX0415	Cover for the STAGE SHOT II	
MFX0413	25 caps + 25 cores for the STAGE SHOT II	
MFX0406II	Flexible air hose 5 m II	
MFX0405	Air Compressor 8 L / 8 bar	

Accessories of the STAGE SHOT II

1.2.4. INPUT & OUTPUT

The output pipe has a capacity of 3 litres and can be filled with confetti or streamers. The maximum load per shot depends on the type of input material. The output distance depends on the type of input material and the load. The output has a maximum distance of 25 m.

NOTICE	Wind and other weather circumstances will influence the output distance. The given values are estimated values.

1.3. STADIUM SHOT II

1.3.1. TECHNICAL DATA

Product	Product Name	STADIUM SHOT II	
	Product Code	MFX0401II	
	Product Type	CONFETTI & STREAMER FX	
Main Dimensions	Length	800 mm	31.5 in
	Width	600 mm	23.6 in
	Height	855 mm	33.7 in
Weight	Weight	108 kg	238.1 lb
Environment	Minimum Temperature	- 10 °C	14 °F
	Maximum Temperature	70 °C	158 °F
	Humidity (Relative)	20 to 90 % (non-condensing)	
Electrical	Voltage Input (Vac)	100 - 250 Vac	
	Voltage Frequency	50 - 60 Hz	
	Power Consumption (Vac)	20 W	
	Power Connector (Vac)	Neutrik® powerCON TRUE1 (in&out)	
	Voltage Input (Vdc)	12 - 24 Vdc	
	Power Connector (Vdc)	Banana Plug & Wire	
Pressure tank	Maximum Pressure	8 bar	116 psi
	Volume	36 L	
Usage	Consumable(s)	Confetti & Streamers	

Technical data of the STADIUM SHOT II

1.3.2. PRODUCT IDENTIFICATION

Type plate of the STADIUM SHOT II

1.3.3. ACCESSORIES

Code	Product	Included
MFX0313	Schuko to Neutrik® powerCON TRUE1 cable - 1.5 m	X
MFX0404	Compression caps tape 50 m x 50 mm	
MFX0413	Cover for the STADIUM SHOT II	
MFX0407	25 caps + 25 cores for the STADIUM SHOT II	
MFX0406II	Flexible air hose 5 m II	
MFX0405	Air Compressor 8 L / 8 bar	

Accessories of the STADIUM SHOT II

1.3.4. INPUT & OUTPUT

The output distance depends on the type of input material. The maximum load per shot also depends on the type of input material. Check the following table.

Input	Max. load per shot	Output distance
Confetti	2 – 3 kg	20 m
Streamers 10 m x 1.5 cm	25 polybags	35 m
Streamers 10 m x 5 cm	12 polybags	35 m
Stadium Streamers 20 m x 5 cm	8 polybags	40 m

Input types and related loads and output distance of the STADIUM SHOT II

NOTICE	Wind and other weather circumstances will influence the output distance. The given values are estimated values.

1.4. X-TREME SHOT

1.4.1. TECHNICAL DATA

Product	Product Name	X-TREME SHOT	
	Product Code	MFX0414	
	Product Type	CONFETTI & STREAMER FX	
Main Dimensions	Length	970 mm	38.2 in
	Width	700 mm	27.6 in
	Height	1040 mm	40.9 in
Weight	Weight	157 kg	346.1 lb
Environment	Minimum Temperature	- 10 °C	14 °F
	Maximum Temperature	70 °C	158 °F
	Humidity (Relative)	20 to 90 % (non-condensing)	
Electrical	Voltage Input (Vac)	100 - 250 Vac	
	Voltage Frequency	50 - 60 Hz	
	Power Consumption (Vac)	20 W	
	Power Connector (Vac)	Neutrik® powerCON TRUE1 (in&out)	
	Voltage Input (Vdc)	12 - 24 Vdc	
	Power Connector (Vdc)	Banana Plug & Wire	
Pressure tank	Maximum Pressure	8 bar	116 psi
	Volume	68 L	
Usage	Consumable(s)	Confetti & Streamers	

Technical data of the X-TREME SHOT

1.4.2. PRODUCT IDENTIFICATION

Type plate of the X-TREME SHOT

1.4.3. ACCESSORIES

Code	Product	Included
MFX0313	Schuko to Neutrik® powerCON TRUE1 cable - 1.5 m	X
MFX0404	Compression caps tape 50 m x 50 mm	
MFX0417	Cover for the X-TREME SHOT	
MFX0411	25 caps + 25 cores for the X-TREME SHOT	
MFX0406II	Flexible air hose 5 m II	
MFX0405	Air Compressor 8 L / 8 bar	

Accessories of the X-TREME SHOT

1.4.4. INPUT & OUTPUT

The output distance depends on the type of input material. The maximum load per shot also depends on the type of input material. Check the following table.

Input	Max. load per shot	Output distance
Confetti	4 – 6 kg	20 m
Streamers 10 m x 5 cm	25 polybags	35 m
Streamers 10 m x 2.5 cm	30 polybags	35 m
Stadium Streamers 20 m x 5 cm	15 polybags	50 m

Input types and related loads and output distance of the X-TREME SHOT

NOTICE	Wind and other weather circumstances will influence the output distance. The given values are estimated values.

2. SAFETY

The machine has been designed and constructed in such a manner that it can be used safely. This applies to the use, the circumstances and the regulations as described in this documentation. Reading this documentation and following the instructions are therefore necessary for everyone who is authorised to work with the machine.

The machine must be used in surroundings that:

- Have a reasonably stable temperature of between -10 and 70 °C.
- Have a relative humidity degree between 20 % and 90 % (non condensing).
- Are free of dust, corrosive gases and high concentrations of organic vapours.
- Are not situated in the vicinity of a source of vibration.

2.1. GENERAL SAFETY RULES

- Only authorised persons may carry out work with the machine.
- Do not use the machine if there are people or animals in the direct output.
- Make sure that children, unauthorised people and animals do not obtain access to the machine.
- Make sure there are no free-standing objects or objects that can be damaged by the machine within the output distance.
- Do not connect more units to a single electrical circuit than the installed fuse is able to handle. (Calculate the summed load with the electrical data from Chapter 1)
- Do not remove any safeguards, safety caps and safety symbols.
- All required safety devices must be in good condition and function properly.
- Ensure sufficient lighting of the surroundings.
- Keep the workplace clean.

2.2. TRANSPORT

- Check the pressure level on the tank pressure meter before every transport. If necessary, depressurize the system by opening the ventilation valve.

⚠ WARNING	Do not transport or move the STAGE SHOT II, STADIUM SHOT II and X-TREME SHOT when the tank is pressurized. Transporting or moving the machine when pressurized can result in death or serious injury.

2.3. COMPRESSED AIR

- Always use an inspected and certified professional compressor with an air output of maximum 8 bar to fill the tank. Carefully read the manual of the compressor before use.
- Never leave the tank pressurized for more than 15 minutes.
- The machine is equipped with a pressure relief valve that automatically depressurizes the system when the maximum allowed pressure of 8 bar is exceeded. Nevertheless regularly check the tank pressure meter to make sure the pressure in the tank is stable and does not exceed 8 bar. If necessary, depressurize the system by opening the ventilation valve.

2.4. OUTDOOR USE

The STAGE SHOT II, STADIUM SHOT II and X-TREME SHOT are designed for outdoor use.

⚠ WARNING	The STAGE SHOT II, STADIUM SHOT II and X-TREME SHOT can be used indoors in large event halls and arenas. Please refer to section 2.10.

2.5. RIGGING

Please follow the European and national guidelines for safe rigging and trussing.

2.6. NOISE LEVELS

The environmental noise level as measured at the ear is greater than 70 dB(A). This level of noise is only reached during the short instances that the output is active. Always wear hearing protection when you are within 5 metres of the machine during operation.

2.7. CONFETTI & STREAMERS

⚠ WARNING	Always shoot streamers at a minimum of 8 bar pressure to unfold them completely. Shooting streamers at a lower pressure can lead to death or serious injury.
⚠ WARNING	Using any other objects other then MAGICFX® confetti or streamers or other approved MAGICFX® consumables can lead to death or serious injury.

2.8. SAFETY SYMBOLS

Symbol	Meaning
	Make sure **ALL** people, animals, and objects are clear of this area. Not doing so results in death or serious injury.
	Make sure unauthorized personnel, animals, and objects are clear of this area. Not doing so can result in death or serious injury.
	Read the manual carefully before use!
	Wear certified hearing protection!

Safety symbols

2.9. SAFETY WARNINGS

⚠ WARNING	Using a damaged or an improper installed machine can lead to death, serious injury or property damage. Always inspect the machine thoroughly before operation.
⚠ WARNING	Unauthorized operation of the machine can lead to death, serious injury or property damage. Never leave the machine and the power switch unattended when the machine is ready for use.
⚠ WARNING	Do not use the machine if alterations have been made other than by or on behalf of MAGIC FX.
⚠ WARNING	Missing or obscured safety symbols on the machine can lead to death, serious injury or property damage. Make sure all safety symbols are correctly in place and visible, see Section 2.8.
⚠ WARNING	Make sure there are no objects near the output that can be damaged or overthrown by the STAGE SHOT II, STADIUM SHOT II & X-TREME SHOT.
⚠ CAUTION	Always install the output pipe before operating the machine.

2.10. SAFETY ZONES

⚠ DANGER

When pressurized, keep the output zone as shown in the image below clear of all people, animals and objects. Not doing so results in death or serious injury.

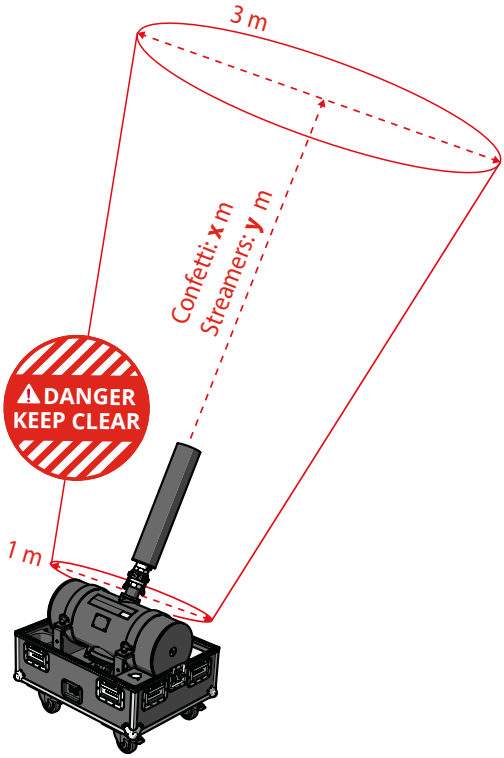

	STAGE SHOT II	STADIUM SHOT II	X-TREME SHOT
Confetti Distance (X)	5 m	7 m	7 m
Streamer Distance (Y)	10 m	14 m	14 m

⚠ DANGER

Make sure that streamers and/or confetti cannot come into contact with high-voltage lines/power pylons, as this can result in electrocution.

⚠ WARNING

Do not use wet consumables. This may lead to serious injury or death.

⚠ WARNING

Always create a safety zone around the machine with a radius of 2 meters / 6.56 feet. Make sure unauthorized personnel, animals and objects are clear of this area. Not doing so can result in death or serious injury.

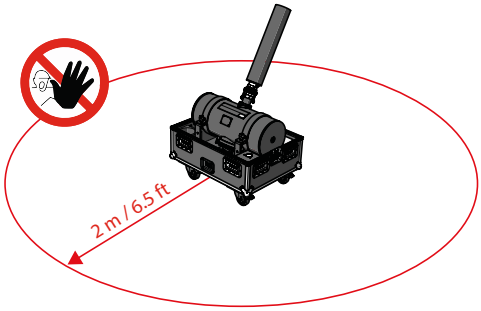

NOTICE

The total size of the output effect depends on the consumable used.

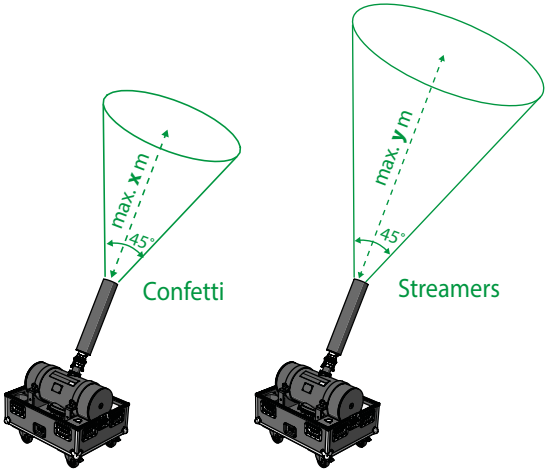

	STAGE SHOT II	STADIUM SHOT II	X-TREME SHOT
Confetti Distance (X)	10 m	20 m	30 m
Streamer Distance (Y)	25 m	40 m	50 m

NOTICE

Make sure the machine is installed properly and set up in a stable position.

3. INSTALLATION AND USE

3.1. INSTALL THE MACHINE

1. Bring the cased machine to the desired location.

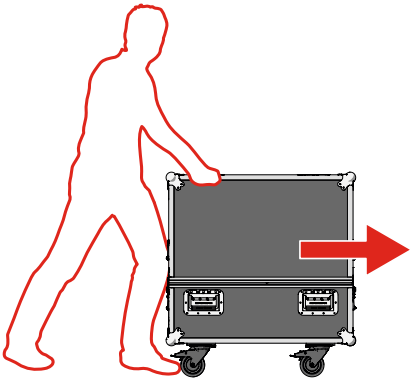

2. Unlock and remove the top cover.

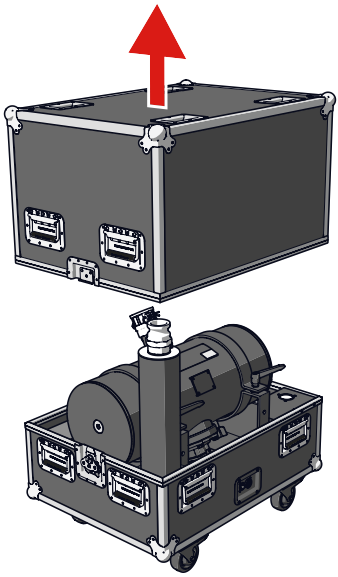

3. Remove the output pipe.

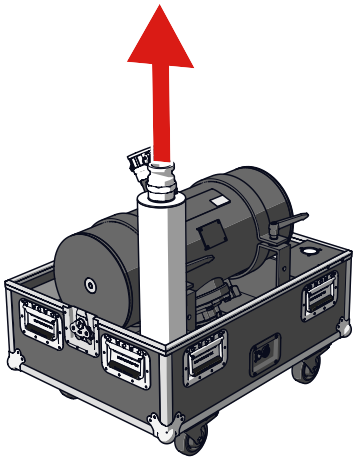

4. Pull the locking clamps downwards to unlock and rotate them upwards.

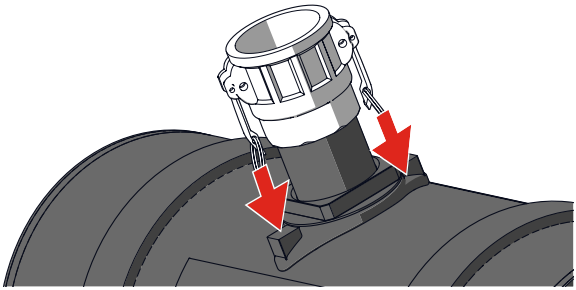

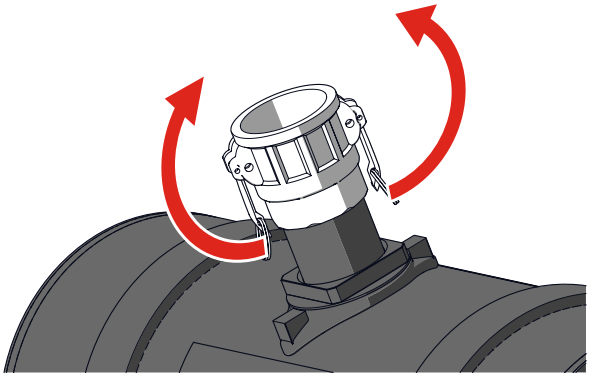

5. Place the output pipe in the coupling while holding the locking clamps upwards.

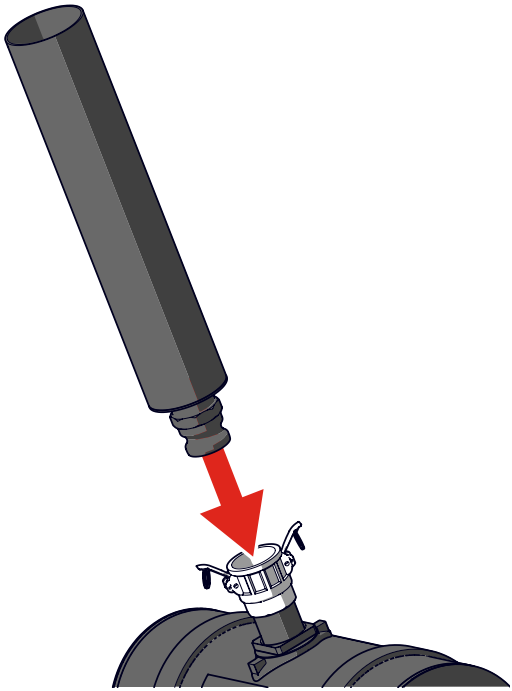

6. Lock the output pipe in place with the locking clamps.

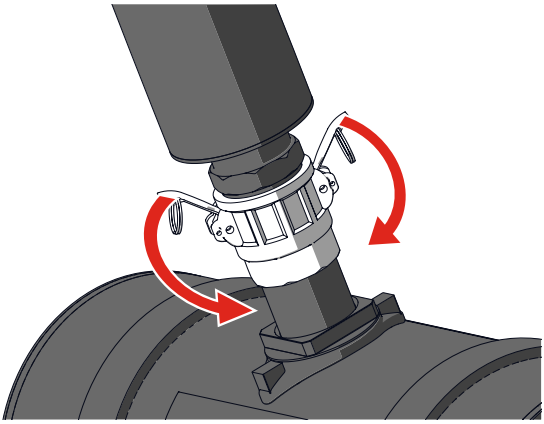

7. Pull the clamps outwards to check if the locking pins are properly locked in place.
   If not: remove the output pipe and repeat step 5 and 6.
   Never use the machine when the clamps are not working properly.

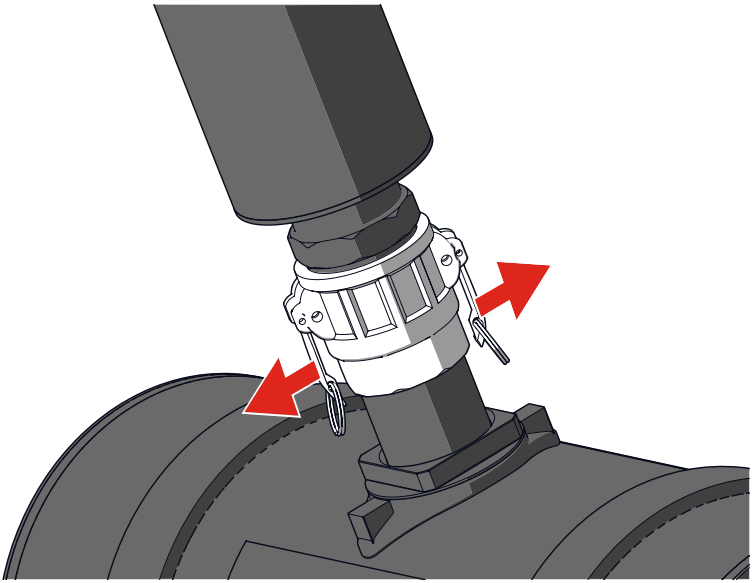

8. Turn the tank clamps counterclockwise.

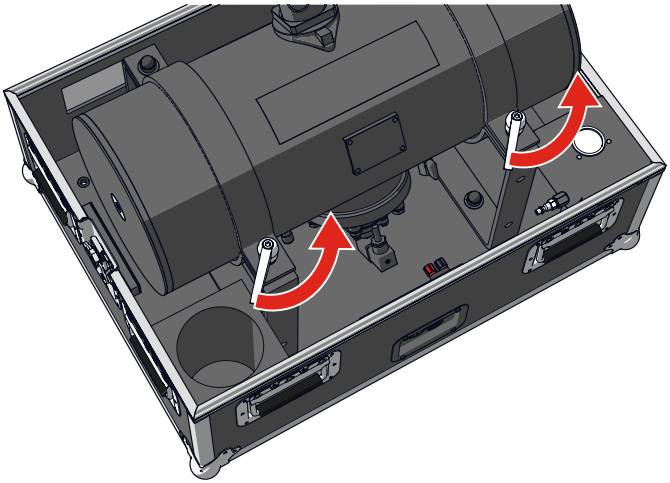

9. Set the tank with attached output pipe in an angle between 0 and 90 degrees.

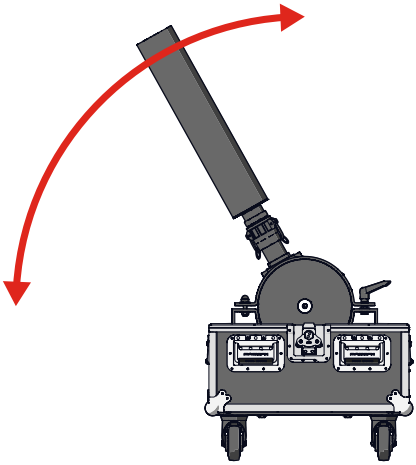

10. Turn the tank clamps clockwise to firmly secure the tank in position.

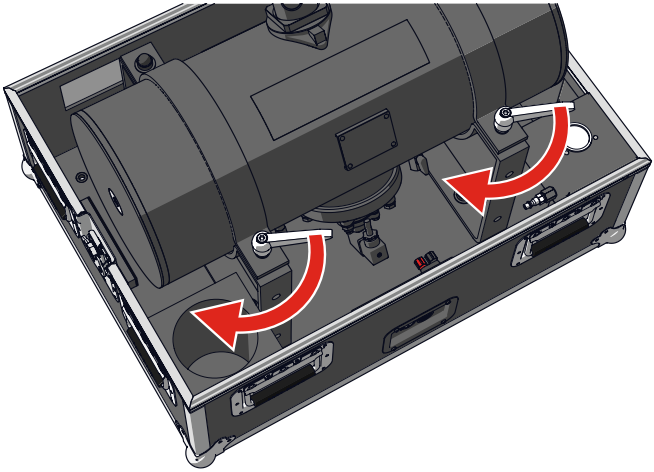

11. Place the machine in its final position and set the brakes.

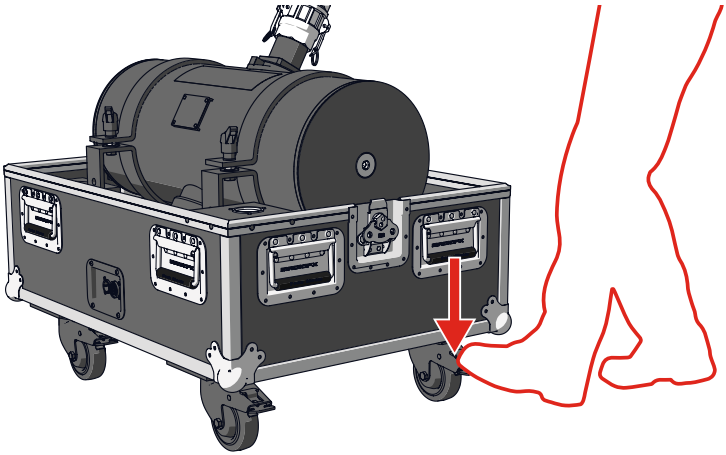

12. Take the necessary safety precautions, see Section 2.9.

3.2. CONNECT POWER

1. Make sure that the power output on your controller or power switch is disabled.
2. Connect power cable(s) to the 12 – 24 Vdc input or the 100 – 250 Vac input.

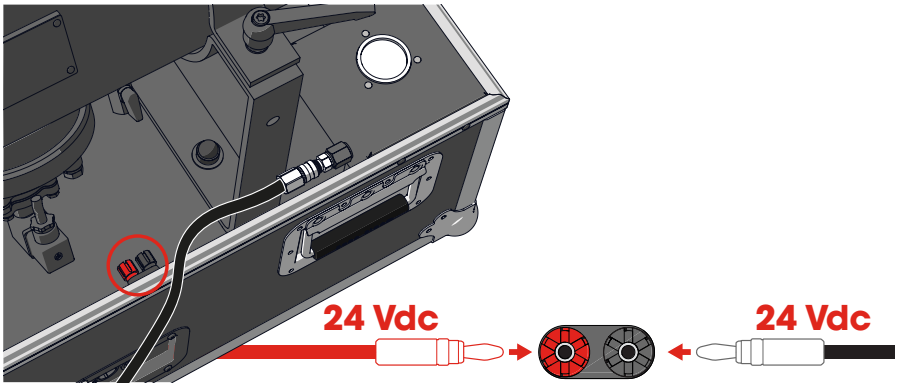

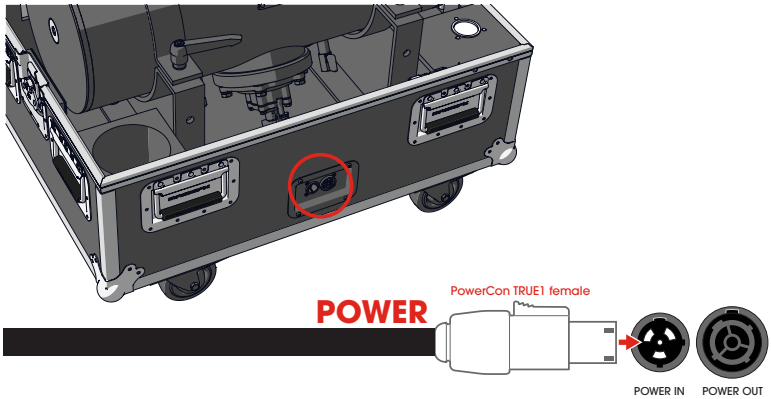

3. Connect the other end(s) to your controller or power switch.

4. Optionally connect another machine to the power output with a power link cable (100 – 250 Vac only).

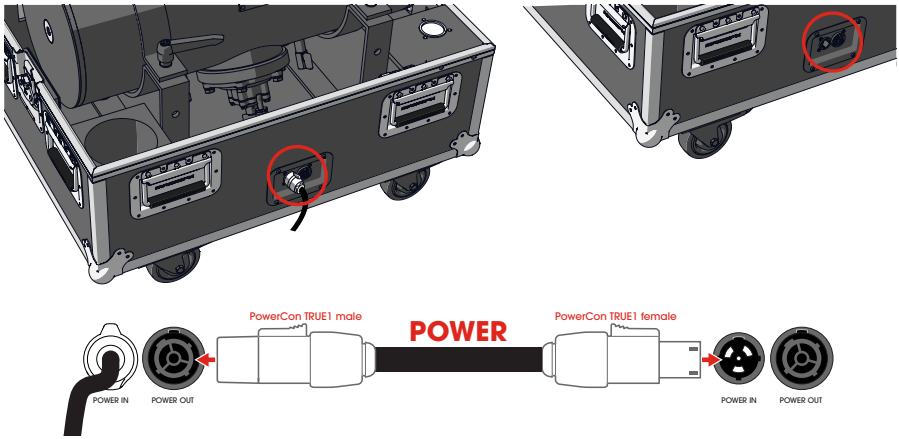

⚠ CAUTION	Do not connect more units to a single electrical circuit than the installed fuse is able to handle. (Calculate the summed load with the electrical data from Chapter 1)

3.3. RUN A TEST

1. Make sure that the pressure level is zero by checking the tank pressure meter. If necessary, depressurize the system by opening the ventilation valve.
2. Switch the power on and check if:
   a. the LED power indicator lights up;
   b. you hear a click sound.
3. If desired, run a test with pressure. Follow the steps from Section 3.5. and 3.6.

3.4. FILL WITH CONFETTI AND/OR STREAMERS

1. Make sure that the machine is functioning correctly by running a test first, see Section 3.3.
2. Make sure that the pressure level is zero by checking the tank pressure meter. If necessary, depressurize the system by opening the ventilation valve.
3. Place a lifting core in the bottom of the output pipe.
   Place a lifting core in the bottom of the output pipe.
   Make sure the lifting core lies flat and closes off the hole in the output pipe!

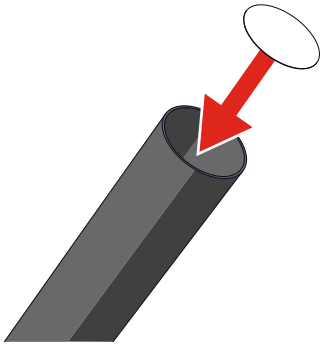

4. Fill the output pipe with confetti and/or streamers.
   Check Chapter 1 for the maximum amount per approved type of input.

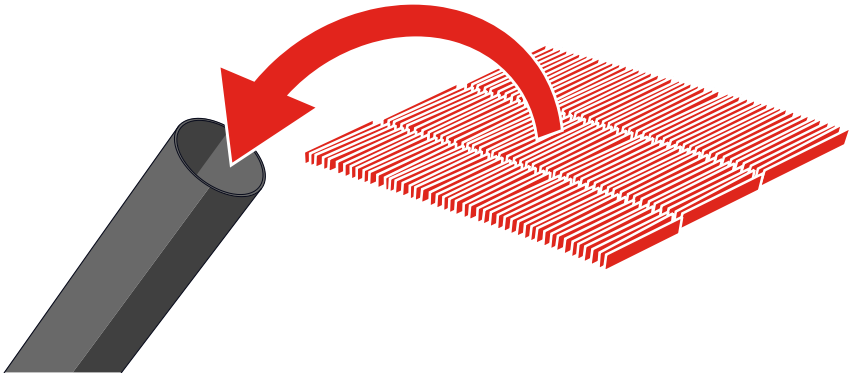

5. Place a pressure cap on top of the output pipe.

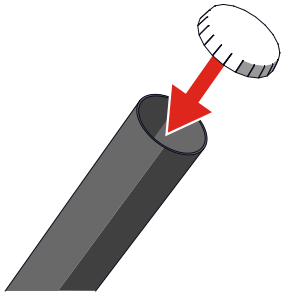

6. Secure the pressure cap to the output pipe with special pressure cap tape.

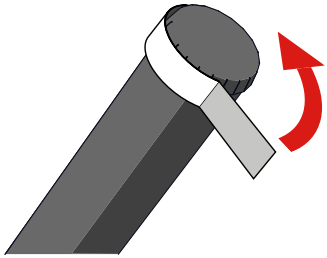

3.5. FILL WITH PRESSURISED AIR

1. Connect the hose from an air compressor to the air coupling.
   Only use a compressor with a maximum output of 8 bar. The end of the hose must be fitted with a quick-connect coupling.

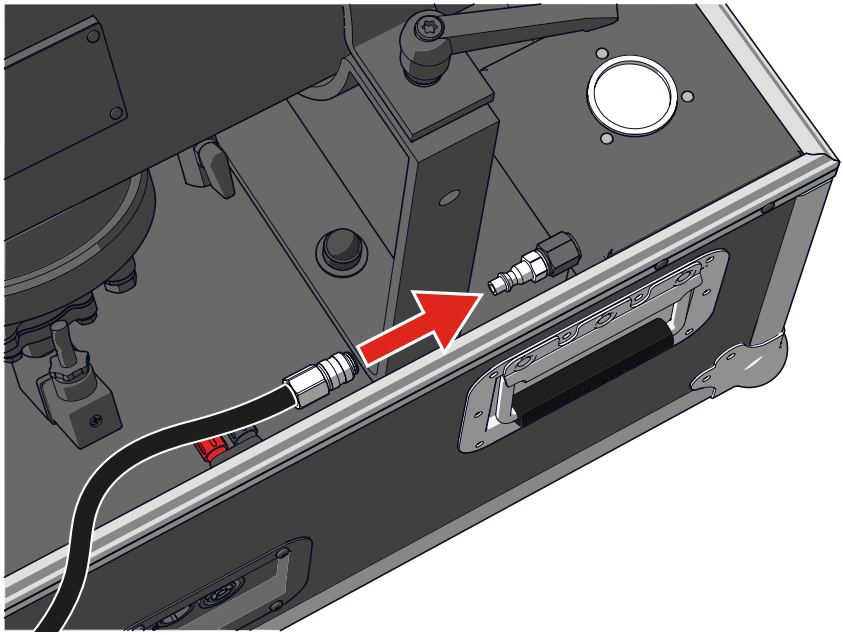

2. Switch on the air compressor and fill the tank to a maximum pressure of 8 bar.
3. In case you do not want the compressor to refill the tank after the shot: Switch off the compressor and disconnect the hose.

3.6. LET'S SHOOT!

1. Make sure that the prescribed safety zone is free from persons and objects.
2. When it's time to shoot, switch the power on.

3. Enjoy the view!

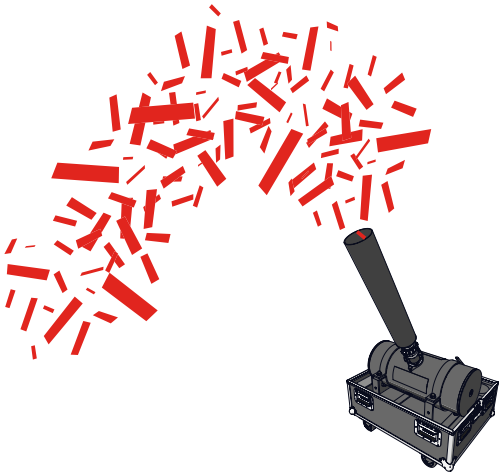

4. Switch the power off.

3.7. CLEAN UP

1. Disconnect the power cable(s).
2. Disconnect the compressor hose from the air coupling (if not done already).

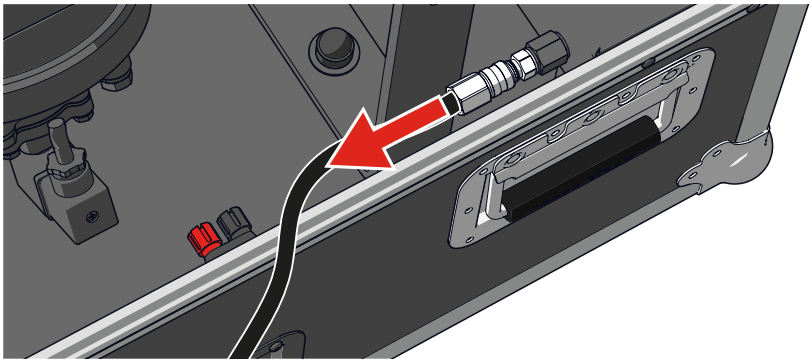

3. Open the ventilation valve to remove any remaining air from the tank.

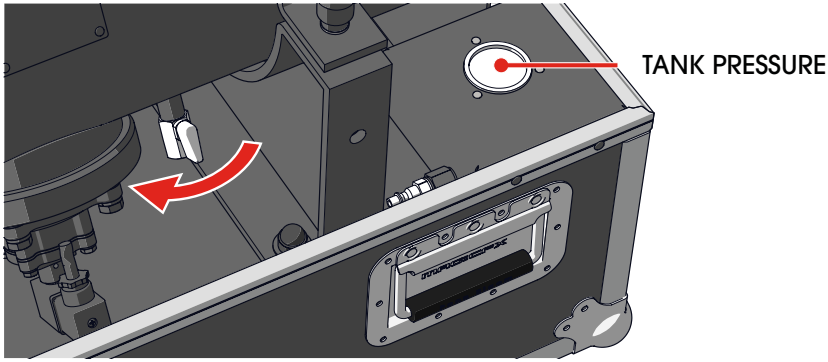

4. Pull the locking clamps downwards to unlock and rotate them upwards.

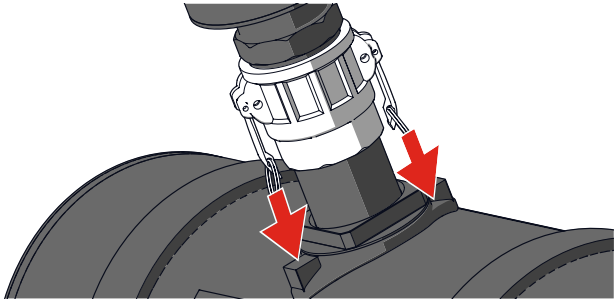

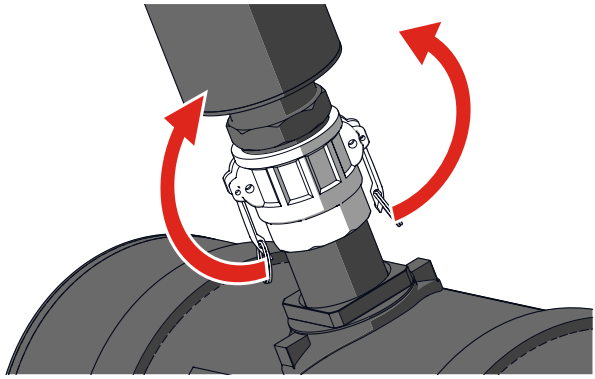

5. Remove the output pipe from the coupling.

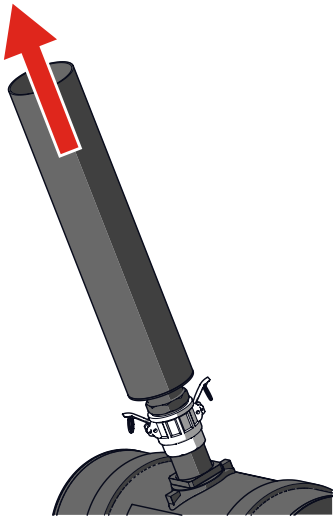

6. Store the output pipe in the flightcase.

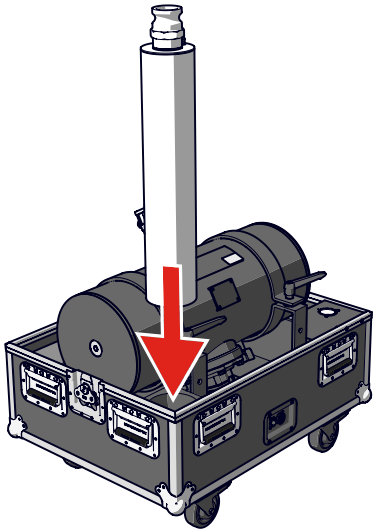

7. Place and lock the top cover.

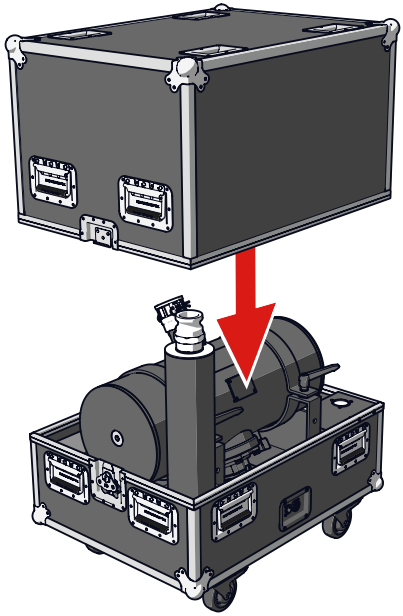

8. Release the brakes.

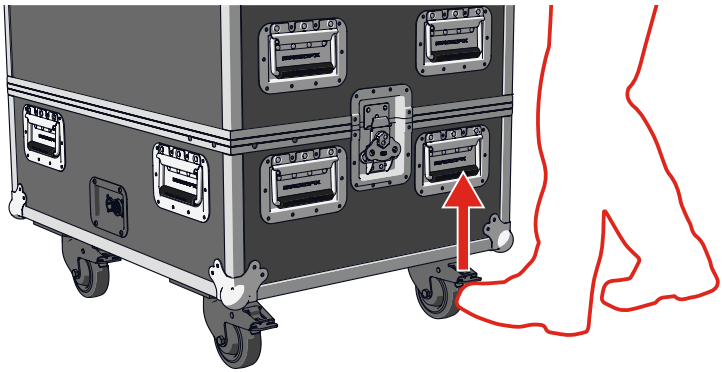

4. TROUBLESHOOTING

Always contact MAGIC FX if any malfunctions or errors occur that cannot be solved with the instructions as described in this manual.

5. MAINTENANCE

To achieve the maximum service life of the machine you must regularly clean the machine and test if it is functioning correctly.

Contact MAGIC FX if the machine is not functioning correctly.

⚠ DANGER	Do not replace parts yourself; always consult MAGIC FX.

6. CORRECT DISPOSAL

This symbol on the product and / or accompanying documents means that used electrical and electronic products should not be mixed with general household waste. For proper treatment, recovery and recycling, please take this product to designated collection points where it will be accepted free of charge. Alternatively, in some countries you may be able to return your products to your local retailer upon purchase of an equivalent new product. Disposing of this product correctly will help save valuable resources and prevent any potential negative effects on human health and the environment, which could otherwise arise from inappropriate waste handling. Please contact your local authority for further details of your nearest designated collection point. Penalties may be applicable for incorrect disposal of this waste, in accordance with your national legislation.

7. EC DECLARATION OF CONFORMITY

According to Annex III A Low Voltage Directive 2014/35/EU + Machinery Directive 2006/42/EC MAGIC FX B.V. declares as manufacturer and composer of the technical construction file that the product with the following specifications:

Name machine	: STAGE SHOT II / STADIUM SHOT II / X-TREME SHOT
Type	: MFX0410II / MFX0401II / MFX0414
Voltage	: 100-250Vac/12-24Vdc
Max. working pressure	: 8 bar / 116 psi
Volume	: 17,7L / 36L / 68L
Serial number	: on product
Year of construction	: on product

Is in conformity with the minimal safety regulations as stated in the following directive(s):

- EMC (2014/30/EC) ElectroMagnetic Compatibility
- RoHS (2011/65/EU) Restriction of the use of certain Hazardous Substances
- WEEE (2012/19/EU) Waste Electrical & Electronic Equipment
- PED (2014/68/EU) Pressure Equipment

The following harmonized standards were applied:

- NEN-EN-ISO 12100:2010 Safety of machinery - General principles for design - Risk assessment and risk reduction.
- NEN-EN-IEC 60204-1:2006, Safety of machinery - Electrical equipment of machines - Part 1: General requirements.
- NEN-EN-IEC 61000-6-3:2007/A1:2011, Electromagnetic compatibility (EMC) - Part 6-3: Generic standards - Emission standard for residential, commercial and light-industrial environments.
- NEN-EN 13445-1:2014, Unfired pressure vessels.

☐ Original declaration of conformity

☑ Translation of the original declaration of conformity

Name manufacturer	: MAGIC FX B.V.
Address	: Schouwrooij 27, 5281 RE BOXTEL
Country	: The Netherlands
CEO	: B. Veroude
Date	: 6-10-2017
Signature	

MAGICFX®

WWW.MAGICFX.EU