USER AND INSTALLATION MANUAL

MAGIC FX®

ENGLISH

/CO2 GUN II®

CE CO2 FX

PART01169
REV 01-03

DISCLAIMER

⚠ **WARNING**	Read this manual carefully before installing and/or using this product. Failure to read the manual and to follow the printed instructions may lead to personal injury and/or damage to the product.

© 2023 MAGICFX®

All rights reserved.

Nothing from this publication may be copied, reproduced and/or published by means of printing, photocopying or by any other means, without the prior written approval of MAGIC FX.

MAGIC FX reserves the right to modify specifications stated in this manual.

TRADEMARKS

Any brand names mentioned in this manual are registered trademarks of their respective owners.

LIABILITY

MAGIC FX accepts no liability for claims from third parties arising from unauthorised use, use other than that stated in this manual, and use other than in accordance with the General Conditions registered at the Chamber of Commerce.

We further refer to the General Conditions. These are available on request, free of charge.

Although considerable care has been taken to ensure a correct and comprehensive description of all relevant components, the manual may nonetheless contain errors and inaccuracies.

Should you detect any errors or inaccuracies in the manual, we would be grateful if you would inform us. This helps us to further improve our documentation.

TABLE OF CONTENT

Introduction		4
Language		4
Revision table		4
1.	**Description**	**5**
1.1.	Main parts	5
1.2.	Technical data	6
1.3.	Product identification	6
1.4.	Accessories	7
2.	**Safety**	**7**
2.1.	General safety rules	7
2.2.	CO2	8
2.3.	Indoor Use	8
2.4.	Noise Levels	8
2.5.	Safety symbols	9
2.6.	Safety warnings	9
3.	**Installation and use**	**10**
3.1.	Connect CO2	10
3.2.	Blast	12
3.3.	Clean up	14
4.	**Troubleshooting**	**18**
5.	**Maintenance**	**18**
6.	**Correct disposal**	**18**
7.	**EC Declaration of Conformity**	**19**

INTRODUCTION

Congratulations! You have bought a great new product from MAGIC FX.

This manual contains all information required for the intended use of the equipment. Deviation from the described intended use can result in a hazardous situation and/or property damage.

This manual includes notes and warnings on safe operation of the equipment. These notes and warnings are accompanied by the following icons. Read them attentively!

⚠ DANGER	Indicates a hazardous situation that, if not avoided, will result in death or serious injury. This signal word is to be limited to the most extreme situations.
⚠ WARNING	Indicates a hazardous situation that, if not avoided, could result in death or serious injury.
⚠ CAUTION	Indicates a hazardous situation that, if not avoided, could result in minor or moderate injury.
NOTICE	Indicates information considered important, but not hazard-related (e.g. messages relating to property damage).

LANGUAGE

This document contains the original instructions in English. In case you require other languages please contact MAGIC FX.

REVISION TABLE

Doc nr	Revision	Date	Description	Author	Approved
PART01169	01-00	29-08-2017	Initial release	TFR	TVA
PART01169	01-01	01-08-2019	Electrostatic noise, A4 to A5 format, accessories changes	TFR	TVA
PART01169	01-02	01-11-2021	Directive correction	NvE	WH
PART01169	01-03	24-11-2023	Preparing for CMS	MBO	WH

1. DESCRIPTION

The CO2 GUN II is a handheld gun-shaped device for safe shooting of CO2 into the air.

Before operation the CO2 GUN II needs to be connected to a CO2 cylinder. When the user squeezes the handle, the CO2 is released from the barrel. The shot is accompanied by a strong hissing sound and a white plume of smoke will be visible from the barrel.

NOTICE	Visibility of the effect can vary due to air humidity. The output will be more visible when there is high absolute air humidity.

1.1. MAIN PARTS

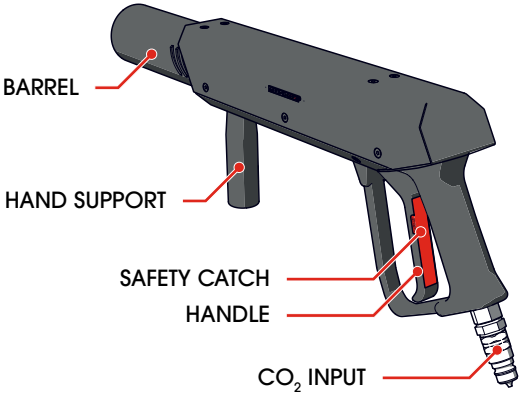

Main parts

1.2. TECHNICAL DATA

Product	Product Name	CO2 GUN II	
	Product Code	MFX1119	
	Product Type	CO2 FX	
Main Dimensions	Length	572 mm	22.5 in
	Width	233.5 mm	9.2 in
	Height	75.7 mm	3 in
Weight	Empty Weight	2.7 kg	6 lbs
Environment	Minimum Temperature	- 10 °C	14 °F
	Maximum Temperature	70 °C	158 °F
	Humidity (Relative)	20 to 90 % (non-condensing)	
	IEC 60529 (IP) Rating	IP12	
Controlling	Control Options	Manual	

Technical data

1.3. PRODUCT IDENTIFICATION

Type plate

1.4. ACCESSORIES

Code	Product	Included
MFX1114	CO2 High Pressure Hose 3/8 Male - Female, 1.25 m	
MFX1105	CO2 High Pressure Hose 3/8 Male - Female, 2 m	
MFX1106	CO2 High Pressure Hose 3/8 Male - Female, 3 m	
MFX1121	CO2 High Pressure Hose 3/8 Male - Female, 5 m	
MFX1108	CO2 High Pressure Hose 3/8 Male - Female, 10 m	
MFX1109	CO2 High Pressure Hose 3/8 Male - Female, 15 m	
MFX1122	CO2 High Pressure Hose 3/8 Male - Female, 20 m	
MFX1110	CO2 90 Degrees Connector 3/8	
MFX1103	CO2 Bottle to Hose Connector	
MFX1115	CO2 Bottle to Hose Connector 90 Degrees	

Accessories

Please contact MAGIC FX for additional possibilities.

2. SAFETY

The CO2 GUN II has been designed and constructed in such a manner that it can be used safely. This applies to the use, the circumstances and the regulations as described in this documentation. Reading this documentation and following the instructions are therefore necessary for everyone who is authorised to work with the CO2 GUN II.

The CO2 GUN II must be used in surroundings that:

- Have a reasonably stable temperature of between -10 and 70 °C;
- Have a relative humidity degree between 20 % and 90 % (non condensing);
- Are free of dust, corrosive gases and high concentrations of organic vapours.
- Are not situated in the vicinity of a source of vibration.

2.1. GENERAL SAFETY RULES

- Only authorised persons may work with the CO2 GUN II;
- Do not use the CO2 GUN II if there are people or animals in the direct output;
- Make sure that children, unauthorised people and animals do not obtain access to the CO2 GUN II;
- Do not remove or bypass any safeguards and safety symbols.
- All required safety devices must be in good condition and function properly;
- Ensure sufficient lighting of the surroundings;
- Keep the workplace clean.

2.2. CO2

The CO2 GUN II uses liquid or gaseous CO2 as input.

The application of CO2 involves serious risks. Make sure that you are well informed on these risks before installation and/or operation. Always use approved CO2 cylinders, hoses and connections. Always consult your CO2 supplier for regulations and instructions on safe installation and use.

MAGIC FX is not liable for unsafe situations, accidents and damage that are the result of incorrect working with CO2 and CO2 cylinders.

⚠ WARNING	Inadequate installation and/or operation of a CO2 powered machine and CO2 cylinders can lead to death or serious injury. Always follow the instructions from this manual, from your CO2 supplier and from local authorities.

2.3. INDOOR USE

The CO2 GUN II is designed for outdoor use and use in well-ventilated indoor spaces. When used indoors, make sure you take the necessary preparations. These preparations could include, but are not limited to:

- Consulting your CO2 supplier.
- Calculating the reduction of oxygen for the indoor space.
- Checking the location for spots where CO could accumulate and taking preventive actions.
- Installing CO2 monitoring devices that will warn for hazardous CO2 levels.

⚠ DANGER	Do not use the CO2 GUN II in poorly ventilated confined spaces. Exposure to high levels of CO2 can cause symptoms like headache, nausea, loss of consciousness or even death.

2.4. NOISE LEVELS

The environmental noise level measured at 1 m (39.4 in) from the product is 103 dB(A). This level of noise is only reached during the short shooting instances. Therefore hearing protection is not necessary.

⚠ WARNING	Do not operate the CO2 GUN II close to yourself or to others for a long period of time. If you experience any hearing loss or ringing in the ears, you should immediately stop using the unit.

2.5. SAFETY SYMBOLS

Symbol	Meaning	Position
	Read the manual carefully before use!	Top of the gun

Safety symbols

2.6. SAFETY WARNINGS

⚠ WARNING	Using a damaged or an improper installed machine can lead to death, serious injury or property damage. Always inspect the machine thoroughly before operation.
⚠ WARNING	Always hold the gun firmly with two hands while in a stable standing position. When fired a reactive force is produced, causing a backlash vibration. This can lead to injuries when the gun is released from the hands unintentionally or when the backlash causes the user to lose balance.
⚠ WARNING	Missing or obscured safety symbols on the machine can lead to death or serious injury. Make sure all safety symbols are correctly in place, see section 2.5..
NOTICE	During operation electrostatic discharge can occur when the machine is touched. Prevent the discomfort of a possible static shock by wearing gloves.

3. INSTALLATION AND USE

3.1. CONNECT CO2

1. Make sure that the safety catch is in locking position.

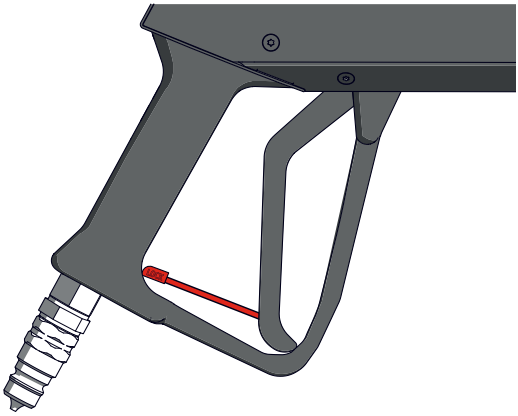

2. Connect the CO2 hose to the CO2 quick connector.

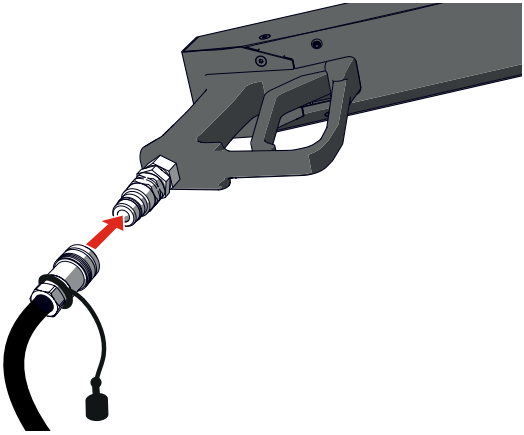

3. Connect a CO2 bottle-to-hose connector to a CO2 cylinder.

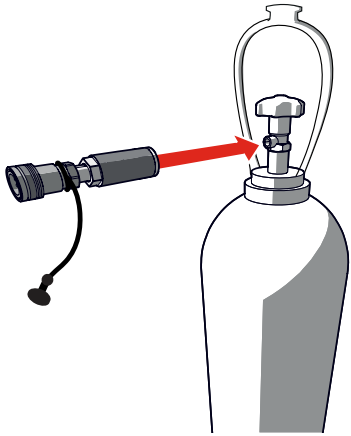

4. Connect the CO2 hose to the CO2 bottle-to-hose connector on the CO2 cylinder.

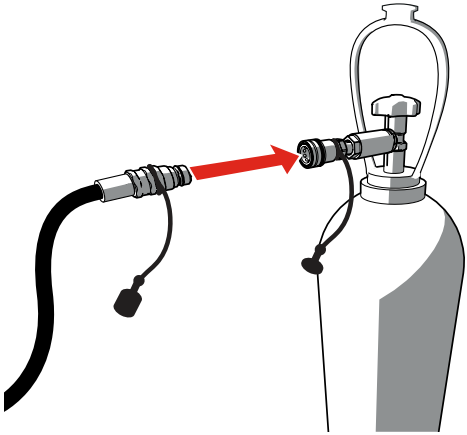

5. Open the CO2 cylinder.

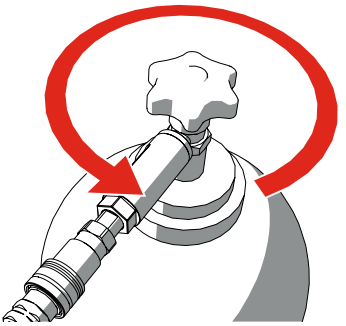

3.2. BLAST

1. Carefully walk to the desired shooting position.
2. Unlock the safety catch.

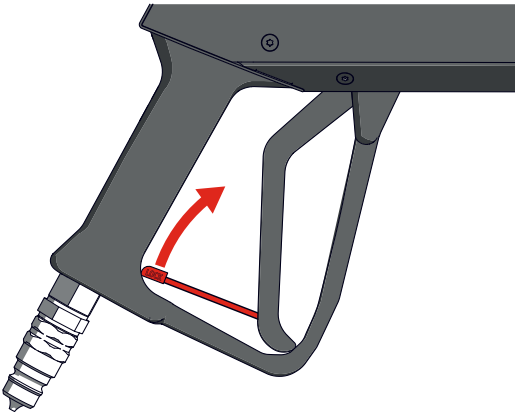

3. Firmly hold with two hands and aim above the audience.

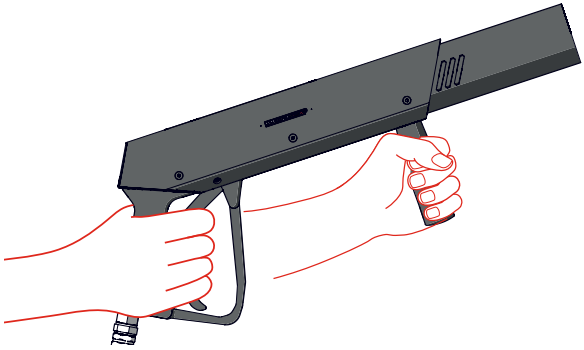

4. Make sure that the direct output is free from persons, animals and objects.
5. When it's time to shoot, squeeze the handle.

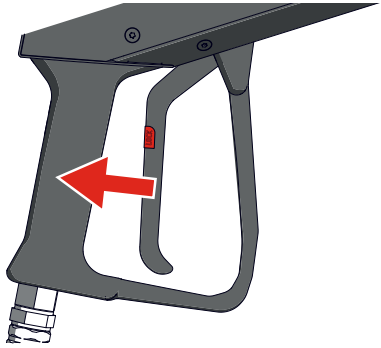

6. Enjoy the view!
7. Release the handle to stop shooting.

8. Place the safety catch back in locking position.

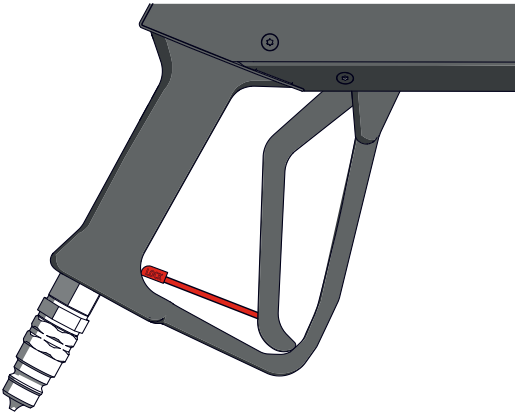

3.3. CLEAN UP

1. Close the CO2 cylinder.

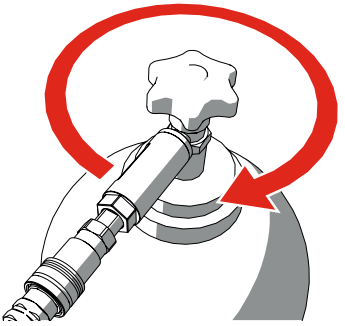

2. Unlock the safety catch.

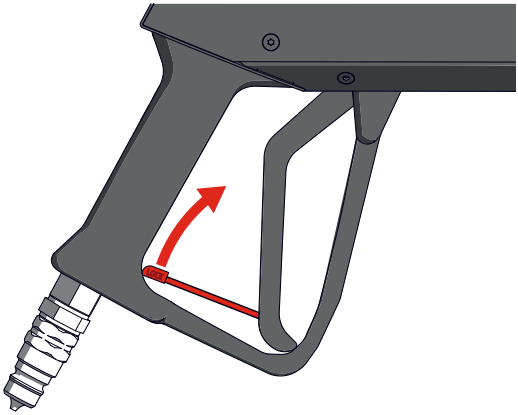

3. Squeeze the handle to release the remaining pressure.

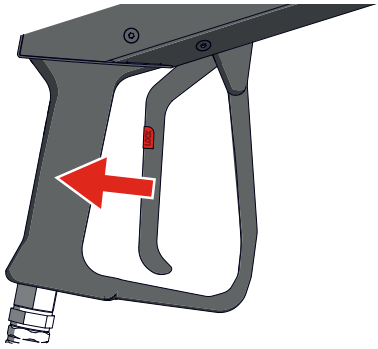

4. Place the safety catch back in locking position.

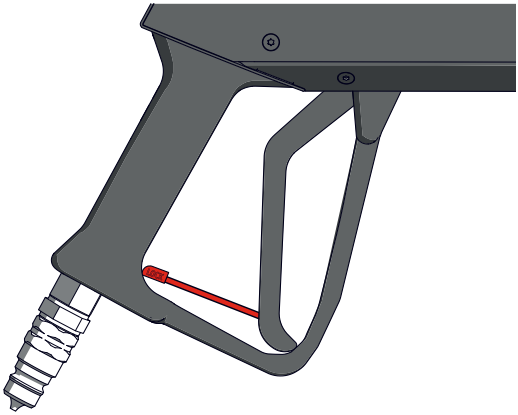

5. Disconnect the CO2 hose from the CO2 quick connector.

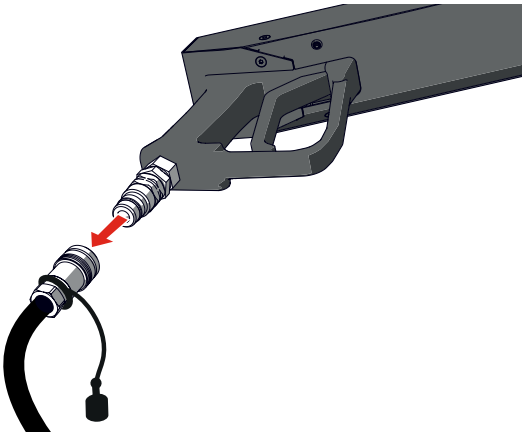

6. Disconnect the CO2 hose from the CO2 bottle-to-hose connector on the CO2 cylinder.

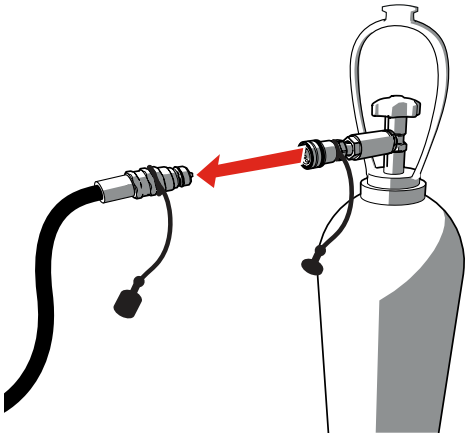

7. Remove the CO2 bottle-to-hose connector from the cylinder.

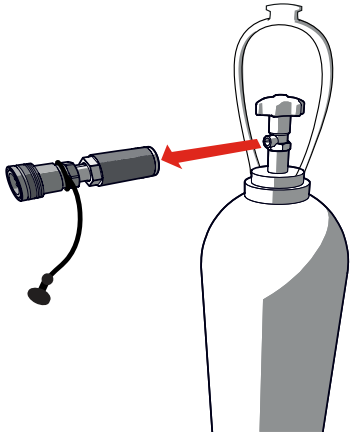

8. Store the gun.

4. TROUBLESHOOTING

Always contact MAGIC FX if any malfunctions or errors occur that cannot be solved with the instructions as described in this manual.

5. MAINTENANCE

To achieve the maximum service life of the CO2 GUN II you must regularly clean the CO2 GUN II and test if it is functioning correctly.

Contact MAGIC FX if the CO2 GUN II is not functioning correctly.

⚠ DANGER	Do not replace parts yourself; always consult MAGIC FX if necessary.

6. CORRECT DISPOSAL

This symbol on the product and / or accompanying documents means that used electrical and electronic products should not be mixed with general household waste. For proper treatment, recovery and recycling, please take this product to designated collection points where it will be accepted free of charge. Alternatively, in some countries you may be able to return your products to your local retailer upon purchase of an equivalent new product. Disposing of this product correctly will help save valuable resources and prevent any potential negative effects on human health and the environment, which could otherwise arise from inappropriate waste handling. Please contact your local authority for further details of your nearest designated collection point. Penalties may be applicable for incorrect disposal of this waste, in accordance with your national legislation.

7. EC DECLARATION OF CONFORMITY

MAGIC FX B.V. declares as manufacturer and composer of the technical construction file that the product with the following specifications:

Name machine	: CO2GUNII®
Type	: MFX1119
Serial number	: on product
Year of construction	: on product

Is in conformity with the minimal safety regulations as stated in the following directive(s):

- PED 2014/68/EU category SP (products in this category cannot be provided with a CE-marking)

The following harmonized standards were applied:

- NEN-EN-ISO 12100:2010 Safety of machinery - General principles for design - Risk assessment and risk reduction.

☐ Original declaration of conformity

☑ Translation of the original declaration of conformity

Name manufacturer	: MAGIC FX B.V.
Address	: Schouwrooij 27, 5281 RE BOXTEL
Country	: The Netherlands
CEO	: B. Veroude
Date	6-10-2017
Signature	

MAGICFX®

WWW.MAGICFX.EU