USER AND INSTALLATION MANUAL

ENGLISH

MAG:CFX®

/PSYCO2JET.®

CE

CO2 FX

PART01127

rev 01-02

DISCLAIMER

⚠ WARNING	Read this manual carefully before installing and/or using this product. Failure to read the manual and to follow the printed instructions may lead to personal injury and/or damage to the product.

© 2019 MAGICFX®
All rights reserved.

Nothing from this publication may be copied, reproduced and/or published by means of printing, photocopying or by any other means, without the prior written approval of MAGIC FX.

MAGIC FX reserves the right to modify specifications stated in this manual.

TRADEMARKS

Any brand names mentioned in this manual are registered trademarks of their respective owners.

LIABILITY

MAGIC FX accepts no liability for claims from third parties arising from unauthorised use, use other than that stated in this manual, and use other than in accordance with the General Conditions registered at the Chamber of Commerce.

We further refer to the General Conditions. These are available on request, free of charge.

Although considerable care has been taken to ensure a correct and comprehensive description of all relevant components, the manual may nonetheless contain errors and inaccuracies.

Should you detect any errors or inaccuracies in the manual, we would be grateful if you would inform us. This helps us to further improve our documentation.

TABLE OF CONTENTS

Disclaimer		2
Trademarks		2
Liability		2
Foreword		4
Language		4
Revision table		4
1	**Meet the MAGICFX® PSYCO2JET!**	**5**
1.1	**Main parts**	**5**
1.2	**Technical data**	**6**
1.3	**Product identification**	**6**
1.4	**Accessories**	**7**
1.5	**Display panel**	**7**
1.6	**RAW MODE**	**11**
1.7	**PRESET Mode**	**12**
1.8	**RDM capability**	**16**
2	**Blast safely!**	**18**
2.1	**General safety rules**	**18**
2.2	**CO_2**	**18**
2.3	**Indoor use**	**19**
2.4	**Rigging**	**19**
2.5	**Noise level**	**19**
2.6	**Safety symbols**	**20**
2.7	**Precautions for operation**	**20**
3	**Let's blast!**	**22**
3.1	**Install the machine**	**22**
3.2	**Mount on a truss**	**25**
3.4	**Connect DMX and power**	**28**
3.5	**Setup multiple machines in a sequence**	**29**
3.6	**Connect CO_2**	**30**
3.7	**Blast with DMX**	**32**
3.8	**Replace a CO_2 cylinder**	**33**
3.9	**Clean up**	**36**
4	**Maintenance**	**38**
5	**Troubleshooting**	**38**
6	**Correct disposal**	**38**
7	**EC Declaration of Conformity**	**39**

FOREWORD

Congratulations! You have bought a great new product from MAGIC FX.

This manual contains all information required for the intended use of the equipment. Deviation from the described intended use can result in a hazardous situation and/or property damage.

This manual includes notes and warnings on safe operation of the equipment. These notes and warnings are accompanied by the following icons. Read them attentively!

⚠ DANGER	Indicates a hazardous situation that, if not avoided, will result in death or serious injury. This signal word is to be limited to the most extreme situations.
⚠ WARNING	Indicates a hazardous situation that, if not avoided, could result in death or serious injury.
⚠ CAUTION	Indicates a hazardous situation that, if not avoided, could result in minor or moderate injury.
NOTICE	Indicates information considered important, but not hazard-related (e.g. messages relating to property damage).

LANGUAGE

This document contains the original instructions in English. In case you require other languages please contact MAGIC FX.

REVISION TABLE

Doc nr	Revision	Date	Description	Author	Approved
PART01127	01-00	13-02-2017	Initial release	TFR	TVA
PART01127	01-01	01-08-2019	A4 to A5 format	TFR	TVA
PART01127	01-02	25-09-2020	Accessories & display information	NvE	LL

1 MEET THE MAGICFX® PSYCO2JET!

The MAGICFX® PSYCO2JET is a special effects machine that blasts CO_2 into the air.

The MAGICFX® PSYCO2JET is equipped with a CO_2 powered rotating nozzle. A solenoid valve controls the supply of liquid CO_2 to the nozzle. From the nozzle, the CO_2 escapes through the output pipe. A blast of escaping CO_2 is accompanied by a strong hissing sound and a white plume of smoke will be visible from the output pipe. The nozzle with output pipe is mounted on a 180° rotatable pipe, driven by an electric motor. By blasting and varying the output direction the MAGICFX® PSYCO2JET delivers spectacular effects.

The MAGICFX® PSYCO2JET is outfitted for operation:

- with DMX and optionally RDM;
- in RAW mode or in PRESET mode;
- in sequence with multiple machines.

The MAGICFX® PSYCO2JET is mounted on a truss or on stage.

1.1 MAIN PARTS

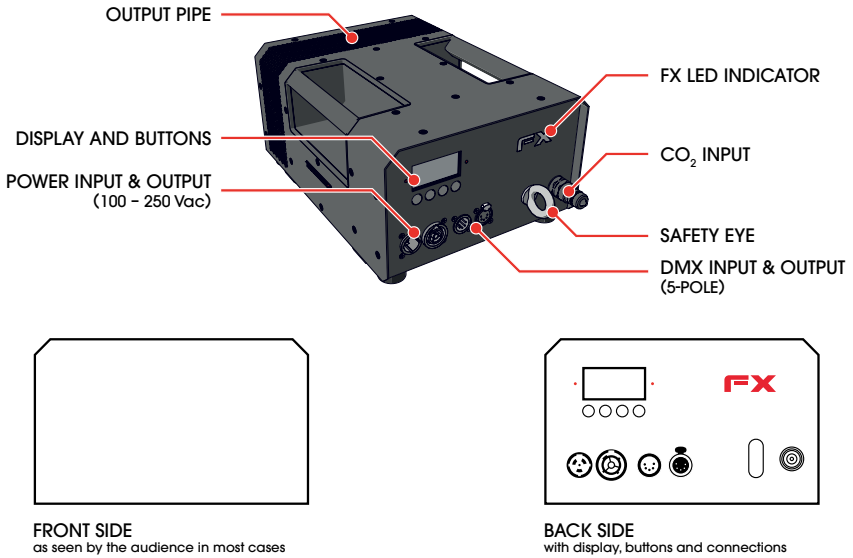

Main parts

All operational tasks and software presets are oriented as if one is facing the front side of the unit.

1.2 TECHNICAL DATA

Product	Product Name	MAGICFX® PSYCO2JET	
	Product Code	MFX1117	
	Product Type	CO_2 FX	
Main Dimensions	Length	330 mm	13 in
	Width	250 mm	9.8 in
	Height	165 mm	6.5 in
Weight	Weight	8.2 kg	18.1 lb
Package	Length	480 mm	18.9 in
	Width	350 mm	13.8 in
	Height	270 mm	10.6 in
	Packaged weight	9 kg	19.8 lb
Environment	Minimum Temperature	-10 °C	14 °F
	Maximum Temperature	50 °C	122 °F
	Humidity (Relative)	20 % to 90 % (non condensing)	
	IEC 60529 (IP) Rating	IP23	
Electrical	Voltage Input	100 – 250 Vac	
	Voltage Frequency	50 – 60 Hz	
	Power Consumption	35 W	
	Power Connector	Neutrik® powerCON TRUE1 (in&out)	
Controlling	Control Options	DMX	
	Control Protocols	DMX512-A (ANSI E1.11) RDM (ANSI E1.20)	
	Control Connectors	Neutrik® 5 pole male / female XLR	
Configuring	Configure Options	On Device & RDM	
Usage	Propellant	Liquid CO_2	
	Propellant Connector	CO_2 Quick Connector 3/8”	
	Propellant Consumption	0.5 L/s	

Technical data

1.3 PRODUCT IDENTIFICATION

Type plate

1.4 ACCESSORIES

Code	Product	Included
MFX1114	CO_2 High Pressure Hose 3/8 Male - Female, 1.25 m	
MFX1105	CO_2 High Pressure Hose 3/8 Male - Female, 2 m	
MFX1106	CO_2 High Pressure Hose 3/8 Male - Female, 3 m	
MFX1108	CO_2 High Pressure Hose 3/8 Male - Female, 10 m	
MFX1109	CO_2 High Pressure Hose 3/8 Male - Female, 15 m	
MFX1110	CO_2 90 Degrees Connector 3/8	
MFX1103	CO_2 Bottle to Hose Connector	
MFX1115	CO_2 Bottle to Hose Connector 90 Degrees	
MFX0313	Schuko to Neutrik® powerCON TRUE1 - cable 1.5 m	

Accessories

Please contact MAGIC FX for additional possibilities.

1.5 DISPLAY PANEL

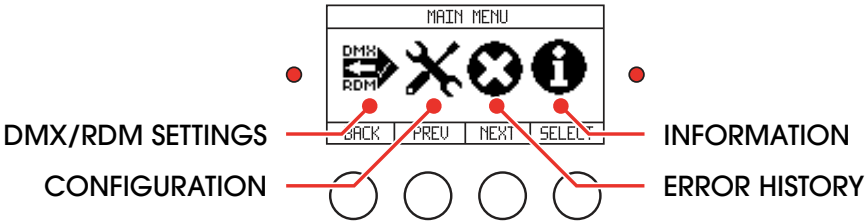

Display panel

The display panel is located on the backside of the MAGICFX® PSYCO2JET. Check the following menu structure for all options in the menu. Use the buttons for navigation and selection. The left-hand LED blinks red when DMX is active. The right-hand LED continuously lights red when an error is present.

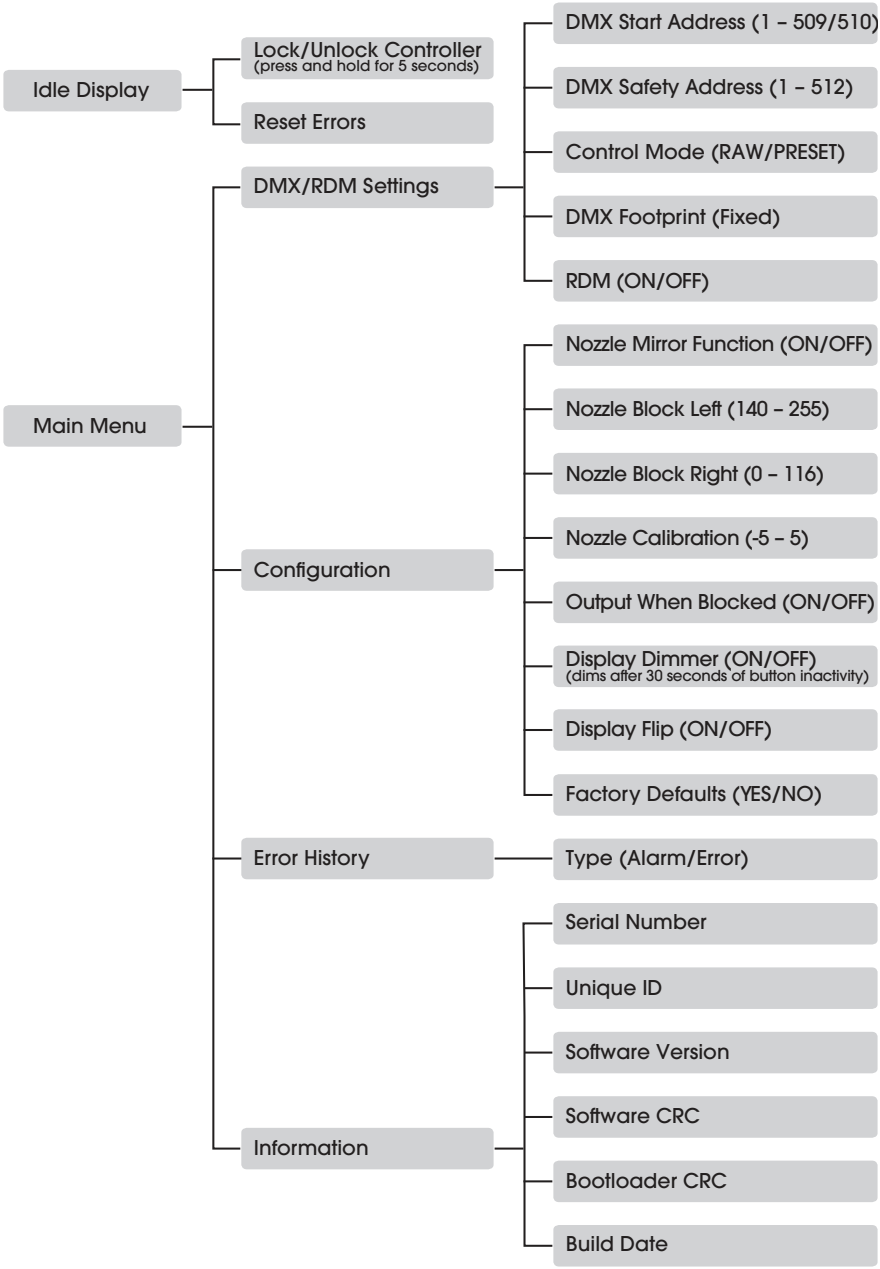

Menu structure

Menu function	Explanation
Lock/Unlock Controller	Holding the Lock button for more than 5 seconds will “lock” the display functions. Meaning buttons will not respond. This to avoid accidental change of parameters via display.To unlock, hold the Unlock button for more than 5 seconds.
Reset Errors	In case there is a locking error present, this button will reset the appliance. If the fault does not persist, the locking error will not reappear.
DMX Start Address (1-509/510)	Setting the DMX start address.
DMX Safety Address (1-512)	Setting the DMX safety address.
Control Mode (RAW/PRESET)	Switch between modes RAW and PRESET.
DMX Footprint (Fixed)	This parameter indicates the DMX footprint, in other words the amount of sequential channels used by the appliance. This does not include the safety channel.
RDM (On/Off)	This function turns on/off the RDM functionality.
Nozzle Mirror Function (On/Off)	Mirror the nozzle direction commands.
Nozzle Block Left (140-255)	Block part of the nozzle rotation range in its left hand swing.
Nozzle Block Right (0-116)	Block part of the nozzle rotation range in its right hand swing.
Nozzle Calibration (-5 - 5)	This parameter can be used to calibrate the nozzle so its swing is fully symmetrical.
Output When Blocked (On Off)	This parameter is only applicable in the PRESET mode. When the nozzle is partly blocked by either “Nozzle block left“ and/or “Nozzle block right” parameters. The CO2 effects that fall into the range that is blocked are either shown on the limit of the range block angle (Output When Blocked = On) or left out (Off).
Display Dimmer (On/Off)	Turn display dimmer on or off. If turned on, the display is dimmed automatically 30 seconds after the last button push.
Display Flip (On/Off)	Change display orientation from normal to up side down.
Factory Defaults (Yes/ No)	Restores the appliance factory default settings.

Type (Alarm/ Error)	Toggle between the occured locking error (Alarm) list, and blocking error (Error) list. Locking errors need intervention by user, although they are “auto-reset” 3 times before the appliance remains in error until reset by user. Blocking errors clear when the triggering fault disappears. 16 locked, and 16 blocked errors are logged. Top of the list shows the last occurring error.
Serial Number (DDDDD)	Appliance serial number as also printed on the appliance label.
Unique ID (HHHHHHHHHHHH)	UID number as the appliance appears in the RDM device list after running discovery.
Software Version	Installed software version.
Software CRC	CRC of the functional software.
Bootloader CRC	CRC of the bootloader software.
Build Date	Release date of functional software.

1.6 RAW MODE

In RAW mode, the operator controls the output of the MAGICFX® PSYCO2JET directly. With DMX the operator controls the following variables:

- The angle of the rotating nozzle and output pipe, see figure
- The speed of rotation
- The output (CO_2 valve open or closed)

RAW mode is selected from the operator menu. Check Section 1.5 for the menu structure.

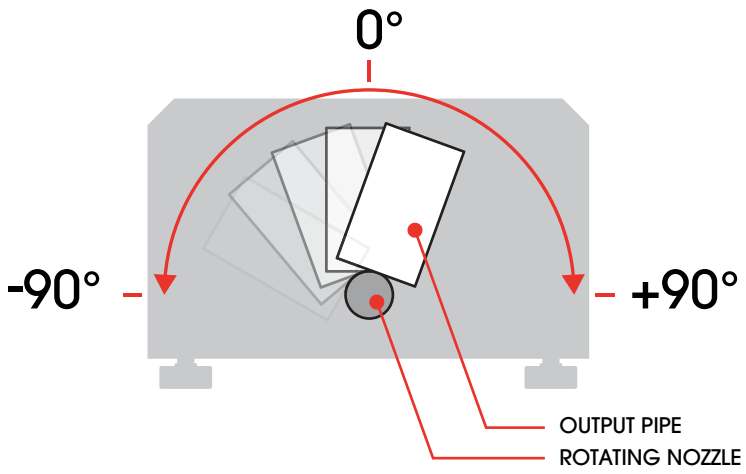

Output angle when facing the front side of the unit

In RAW mode the MAGICFX® PSYCO2JET is controlled with 1 safety address and 3 operational addresses.

DMX Address	Address range
Safety address	1 – 512
Start address (Angle)	1 – 510
Start address + 1 (Speed)	1 – 511
Start address + 2 (Output)	1 – 512

DMX addresses in RAW mode

The Safety address cannot be the same as one of the operational addresses.

Operating of the addresses in RAW mode results in the following:

DMX Address	DMX Value (decimal)		Result
Safety address	0	99	Device disabled
	100	155	Device enabled
	156	255	Device test mode (CO_2 output is disabled)
Start address (Angle)	0	126	-90° to -0.7°
	127	128	Center position
	129	255	+0.7° to +90°
Start address + 1 (Speed)	0	255	Minimal speed -> Full speed
Start address + 2 (Output)	0	199	Valve off
	200	255	Valve on

Operation of the DMX addresses in RAW mode

When you link multiple machines with DMX, we advise you to use the same Safety address for all machines.

⚠ CAUTION Always plug in a DMX Terminator into the DMX output of the final unit in the control sequence. Using a DMX Terminator improves signal reliability.

1.7 PRESET MODE

In PRESET mode, the operator controls the output of the MAGICFX® PSYCO2JET with the help of one of the preprogrammed presets. With DMX the operator controls the following variables:

- The selected preset
- The speed of rotation of the output pipe
- The directions of the output pipe
- The ´Go´ mode:
  - OFF (No movement)
  - Continuous (The preset is repeated continuously)
  - Step in preset (Step by step)

PRESET mode is selected from the operator menu. Check Section 1.5 for the menu structure.

The MAGICFX® PSYCO2JET is programmed with 10 presets. Each preset is a unique sequence of pulses and/or sweeps of CO_2, see figures.

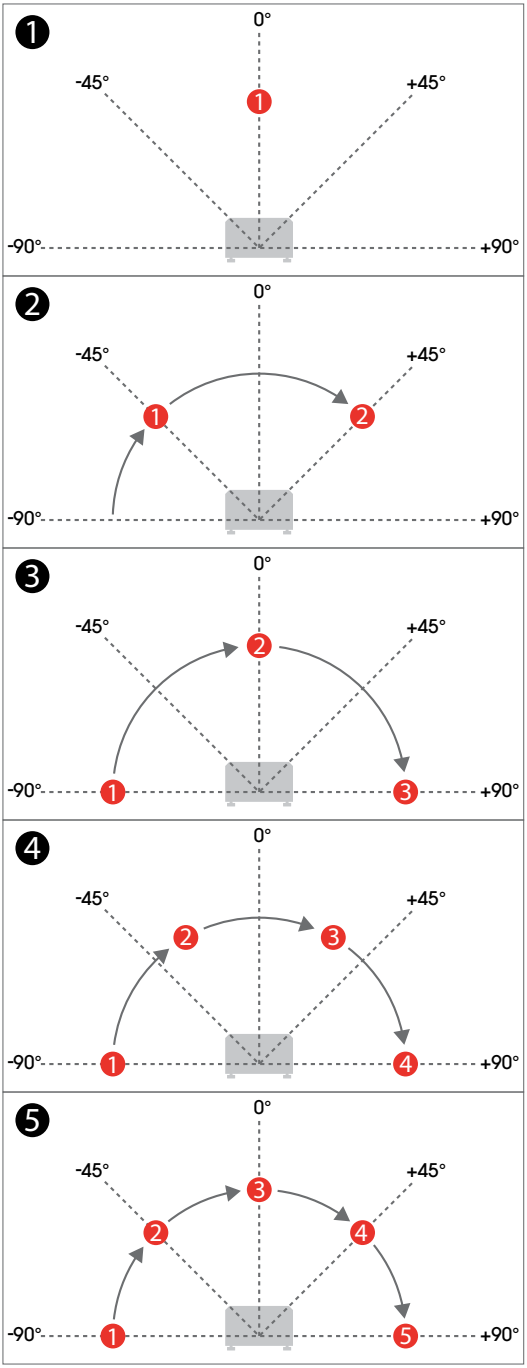

8 Preset number

3 Sequence number (left direction)

Pulse

Long pulse

Sweep

Movement of nozzle

Presets sequences 1–5 when facing the front side of the unit

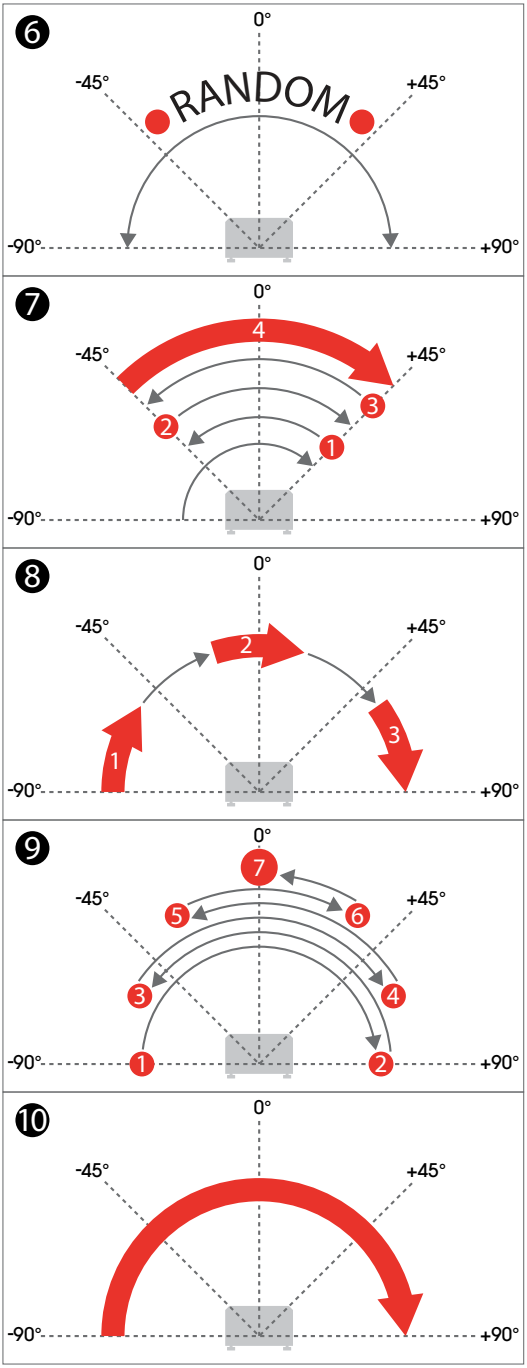

8 Preset number

3 Sequence number (left direction)

Pulse

Long pulse

Sweep

Movement of nozzle

Presets sequences 6–10 when facing the front side of the unit

In PRESET mode the MAGICFX® PSYCO2JET is controlled with 1 safety address and 4 operational addresses.

DMX Address	Address range
Safety address	1 – 512
Start address (Preset)	1 – 509
Start address + 1 (Speed)	1 – 510
Start address + 2 (Direction)	1 – 511
Start address + 3 (Go)	1 – 512

DMX addresses in PRESET mode

The Safety address cannot be the same as one of the operational addresses. Operating of the addresses in PRESET mode results in the following:

DMX Address	DMX Value (decimal)		Result
Safety address	0	99	Device disabled
	100	155	Device enabled
	156	255	Device test mode (CO2 output is disabled)
Start address (Preset)	0	24	#1: Single pulse straight up (0°)
	25	49	#2: 2 pulses distributed over 180° (-45° +45°)
	50	74	#3: 3 pulses distributed over 180° (-90°, 0°, +90°)
	75	99	#4: 4 pulses distributed over 180° (-90°, -30°, +30°, +90°)
	100	124	#5: 5 pulses distributed over 180° (-90°, -45°, 0°, +45°, +90°)
	125	149	#6: Random pulses over 180°
	150	174	#7: Pulse at +45°, pulse at -45°, pulse at +45°, sweep from -45° back to +45°
	175	199	#8: Three sweeps over 180° (-90° to -54°, -18° to +18° and +54° to +90°)
	200	224	#9: Pulse at -90°, pulse at +90°, pulse at -60°, pulse at +60°, pulse at -30°, pulse at +30°, long pulse at 0°
	225	255	#10: Sweep over 180°
Start address + 1 (Speed)	0	255	Minimal speed -> Full speed

DMX Address	DMX Value (decimal)		Result	
Start address + 2 (Direction)	0	63	Left	Preset repeatedly starts from the left
	64	127	Left Bounce	Preset repeatedly starts from the left and returns mirrored from the right
	128	191	Right Bounce	Preset repeatedly starts mirrored from the right and returns from the left
	192	255	Right	Preset repeatedly starts from the right
Start address + 3 (Go)	0	199	Off	
	200	249	Continuous mode	
	250	255	Step in preset	

Operation of the DMX addresses in RAW mode

When you link multiple machines with DMX, we advise you to use the same Safety address for all machines.

⚠ CAUTION Always plug in a DMX Terminator into the DMX output of the final unit in the control sequence. Using a DMX Terminator improves signal reliability.

1.8 RDM CAPABILITY

Remote Device Management Protocol (RDM) is an enhancement of the DMX512 communication protocol. RDM can be used for configuration and status monitoring while DMX512 takes care of the default controlling.

For RDM you will need a RDM compatible controller. The following RDM parameters are supported by the MAGICFX® PSYCO2JET.

Parameter ID	Discovery	GET	SET
DISC_UNIQUE_BRANCH	X		
DISC_MUTE	X		
DISC_UN_MUTE	X		
DEVICE_INFO		X	
SUPPORTED_PARAMETERS		X	
SOFTWARE_VERSION_LABEL		X	
DEVICE_MODEL_DESCRIPTION		X	
MANUFACTURER_LABEL		X	
SLOT_DESCRIPTION		X	

Parameter ID	Discovery	GET	SET
DMX_PERSONALITY_DESCRIPTION		X	
DMX_START_ADDRESS		X	X
IDENTIFY_DEVICE		X	X
DEVICE_LABEL		X	X
FACTORY_DEFAULTS		X	X
DMX_PERSONALITY		X	X
DISPLAY_INVERT		X	X
TILT_INVERT		X	X
RESET_DEVICE			X

RDM parameters

RDM parameters are subject of change due to software updates. Contact MAGIC FX for the latest information and updates.

2 BLAST SAFELY!

The MAGICFX® PSYCO2JET has been designed and constructed in such a manner that it can be used safely. This applies to the use, the circumstances and the regulations as described in this documentation. Reading this documentation and following the instructions are therefore necessary for everyone who is authorised to work with the MAGICFX® PSYCO2JET.

The MAGICFX® PSYCO2JET must be used in surroundings that:

- Have a stable temperature of between -10 and 50°C.
- Have a relative humidity degree between 20% and 90% (non condensing).
- Are free of dust, corrosive gases and high concentrations of organic vapours.
- Are not situated in the vicinity of a source of vibration.

2.1 GENERAL SAFETY RULES

- Only authorised persons may carry out work with the MAGICFX® PSYCO2JET.
- Do not use the MAGICFX® PSYCO2JET if there are people or animals in the direct output.
- Make sure that children, unauthorised people and animals do not obtain access to the MAGICFX® PSYCO2JET.
- Make sure there are no freestanding objects or objects that can be damaged by the MAGICFX® PSYCO2JET within the output distance.
- Do not use the MAGICFX® PSYCO2JET without a Controller, Dimmer or DMX Pack.
- Do not connect more units to a single electrical circuit than the installed fuse is able to handle. (Calculate the summed load with the electrical data from Chapter 1)
- Do not remove any safeguards, safety caps and safety symbols.
- All required safety devices must be in good condition and function properly.
- Ensure sufficient lighting of the surroundings.
- Keep the workplace clean.

2.2 CO_2

The MAGICFX® PSYCO2JET uses liquid CO_2 as input. The application of CO_2 involves serious risks. Make sure that you are well informed on these risks before installation and/or operation. Always use approved CO_2 cylinders, hoses and connections. Always consult your CO_2 supplier for regulations and instructions on safe installation and use.

MAGIC FX is not liable for unsafe situations, accidents and damage that are the result of incorrect working with CO_2 and CO_2 cylinders.

⚠ WARNING Inadequate installation and/or operation of a CO_2 powered machine and CO_2 cylinders can lead to death or serious injury. Always follow the instructions from this manual, from your CO_2 supplier and from local authorities.

2.3 INDOOR USE

The MAGICFX® PSYCO2JET is designed for outdoor use and use in well-ventilated indoor spaces. When used indoors, make sure you take the necessary preparations. These preparations could include, but are not limited to:

- Consulting your CO_2 supplier.
- Calculating the reduction of oxygen for the indoor space.
- Checking the location for spots where CO_2 could accumulate and taking preventive actions.
- Installing CO_2 monitoring devices that will warn for hazardous CO_2 levels.

⚠ DANGER Do not use the MAGICFX® PSYCO2JET in poorly ventilated confined spaces. Exposure to high levels of CO_2 gas can cause symptoms like headache, nausea, loss of consciousness or even death.

2.4 RIGGING

Please follow the European and national guidelines for safe rigging and trussing.

2.5 NOISE LEVEL

The environmental noise level as measured at the ear is 118 dB(A). This level of noise is only reached during the short instances that the CO_2 output is active. Therefore hearing protection is not necessary.

⚠ WARNING Do not operate the MAGICFX® PSYCO2JET close to yourself or to others for a long period of time. If you experience any hearing loss or ringing in the ears, you should immediately stop using the unit.

2.6 SAFETY SYMBOLS

Symbol	Meaning	Position
	Read the manual carefully before use!	Bottom of the machine

Safety symbols

2.7 PRECAUTIONS FOR OPERATION

⚠ WARNING Using a damaged or an improper installed machine can lead to death, serious injury or property damage. Always inspect the machine thoroughly before operation.

⚠ WARNING A poorly mounted machine will come loose when the machine blasts CO_2. This can lead to death, serious injury and/or property damage. Always inspect if the machine is mounted firmly and correctly as according to the instructions in this manual.

⚠ WARNING Missing or obscured safety symbols on the machine can lead to death, serious injury or property damage. Make sure all safety symbols are correctly in place and visible, see Section 2.6.

⚠ WARNING Make sure there are no objects near the output that can be damaged or overthrown by the MAGICFX® PSYCO2JET.

⚠ WARNING Always create a safety zone around the MAGICFX® PSYCO2JET and its output according to the following pictures (stage mounted and truss mounted).

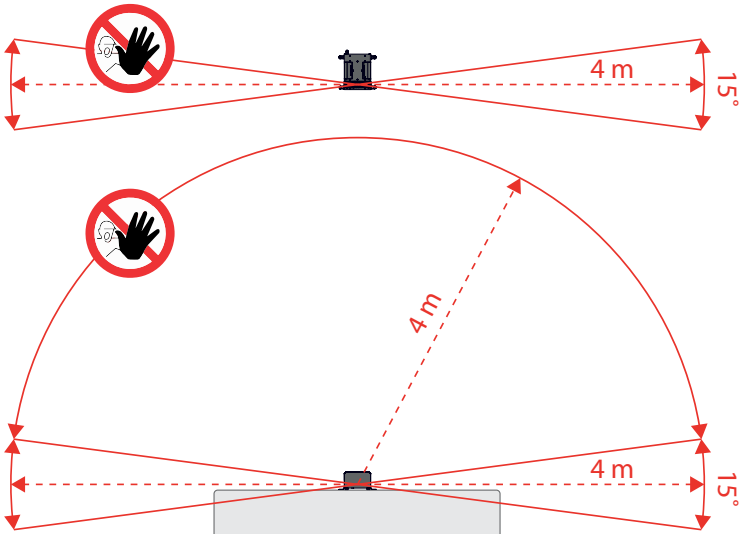

Safety zone for stage mounted units

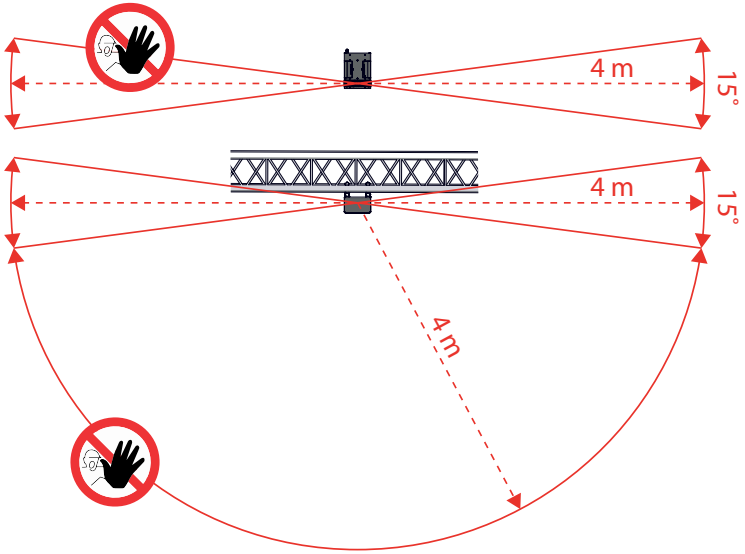

Safety zone for truss mounted units

3 LET'S BLAST!

3.1 INSTALL THE MACHINE

1 Flip the MAGICFX® PSYCO2JET upside down.

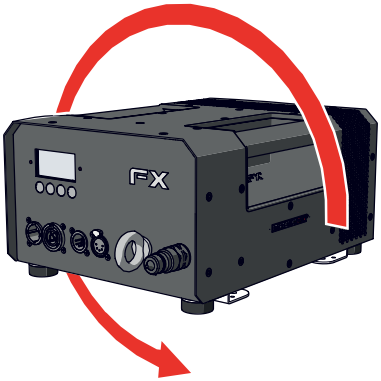

2 Loosen the rubber foots and rotate each stage bracket outwards.

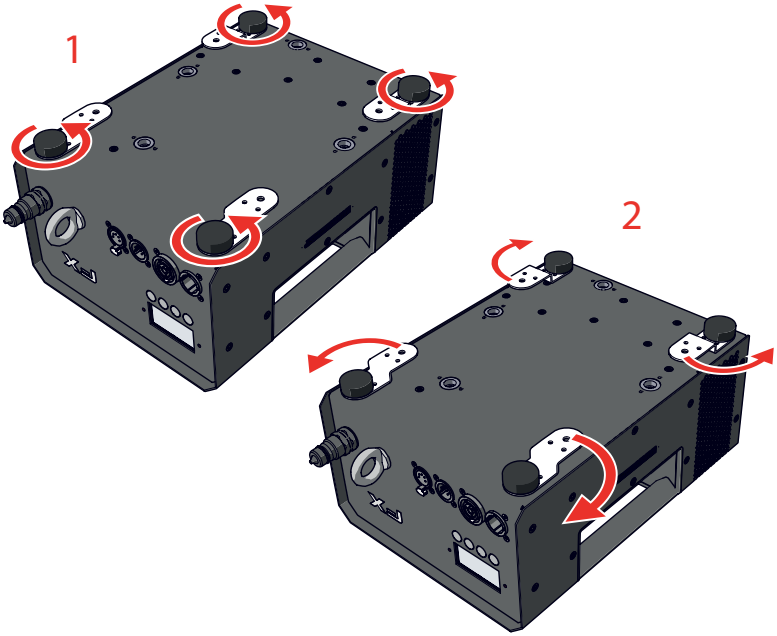

3 Firmly fasten the rubber foots.

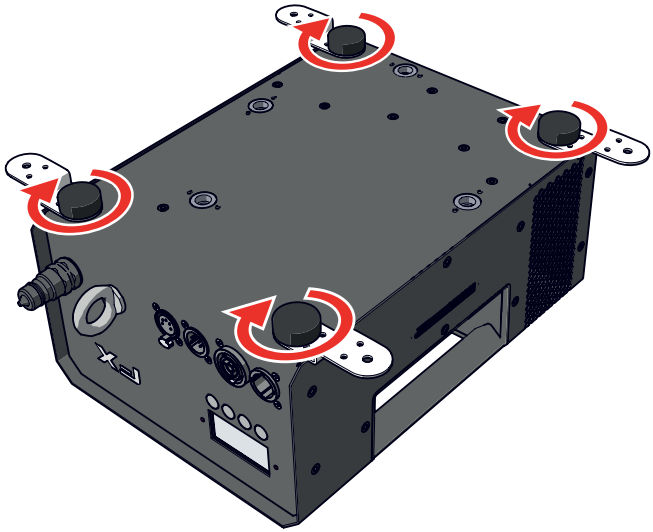

4 Flip the MAGICFX® PSYCO2JET back.

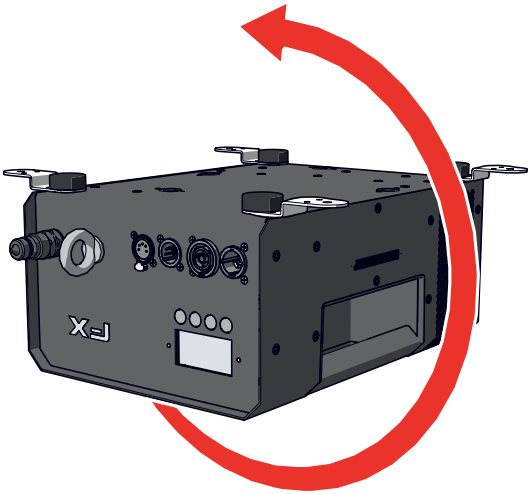

5 Mount the MAGICFX® PSYCO2JET firmly on a stage.

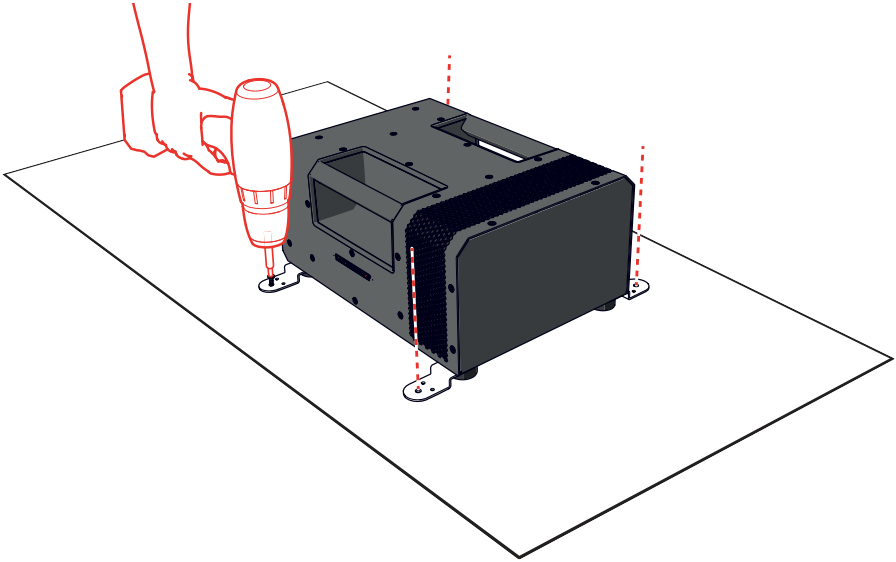

6 Inspect if the MAGICFX® PSYCO2JET is mounted firmly.

7 Take the necessary safety precautions, see Section 2.7.

3.2 MOUNT ON A TRUSS

1 Flip the MAGICFX® PSYCO2JET upside down.

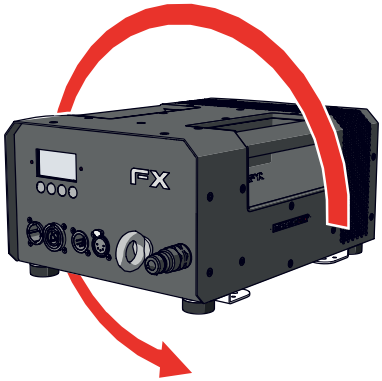

2 Optionally you can remove the rubber foots and stage brackets.

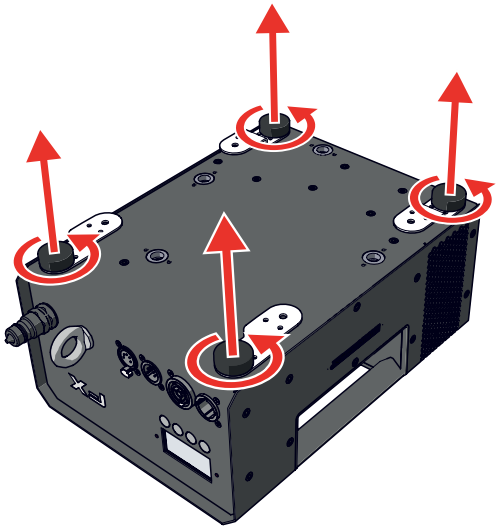

3 Screw clamps into a pair of holes in x or in y direction. Use two M10 twenty clamps for truss mounting (product code MFX3103).

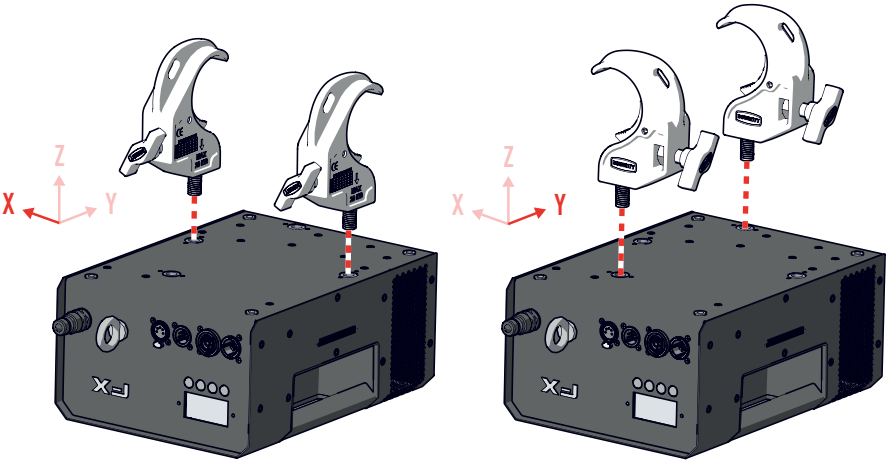

4 Mount the clamps firmly on a truss.

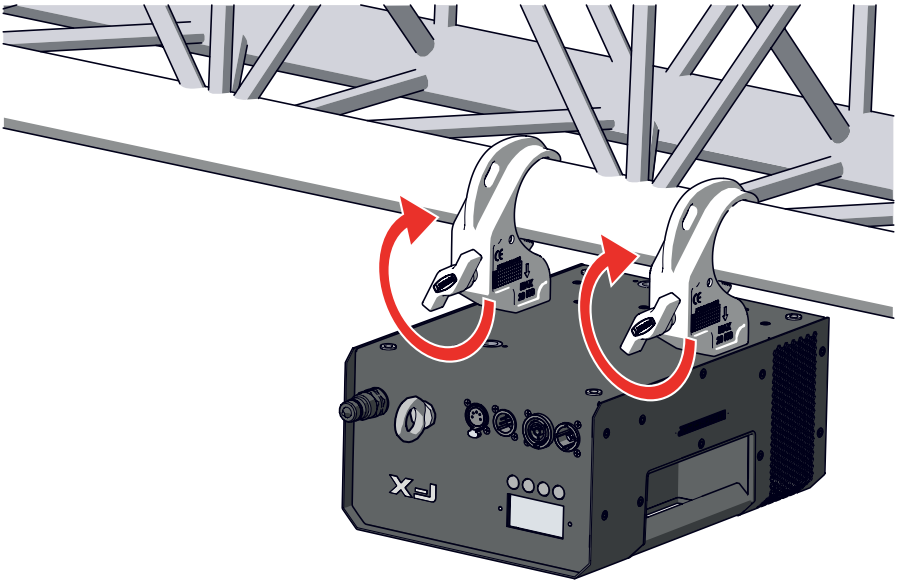

5 Secure the MAGICFX® PSYCO2JET onto the truss with use of the safety eye.

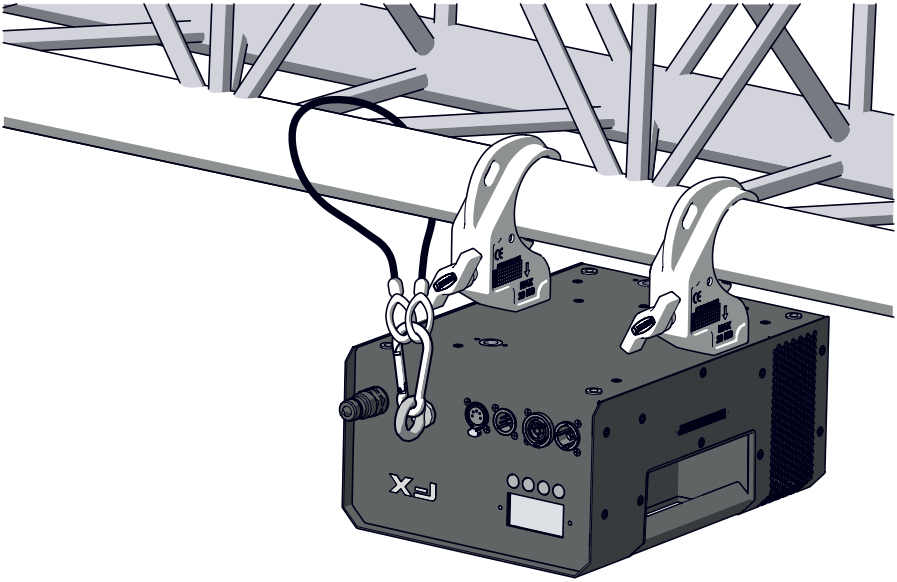

6 Inspect if the MAGICFX® PSYCO2JET is mounted firmly and secured correctly.

7 If the product is used upside down, use "flip mode" in the menu for convenience.

8 Take the necessary safety precautions, see Section 2.7.

3.4 CONNECT DMX AND POWER

1. Connect a power cable with a Powercon TRUE1 Female connector to the power input.

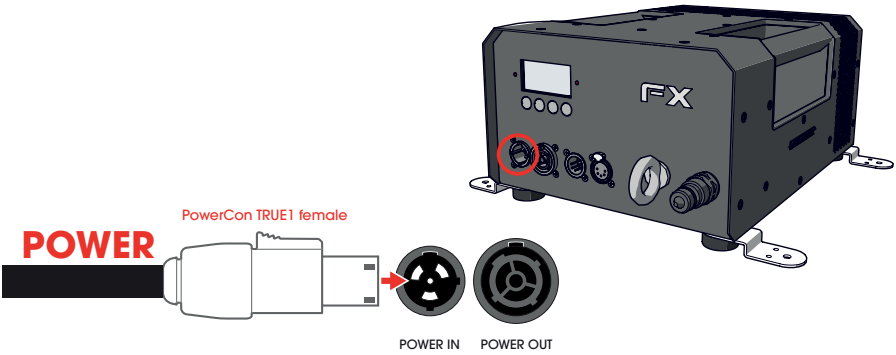

2. Connect the other end of the power cable to a 100 – 250 Vac (50 – 60 Hz) power source.
3. Connect the female connector of a 5-pole DMX cable in the DMX input.

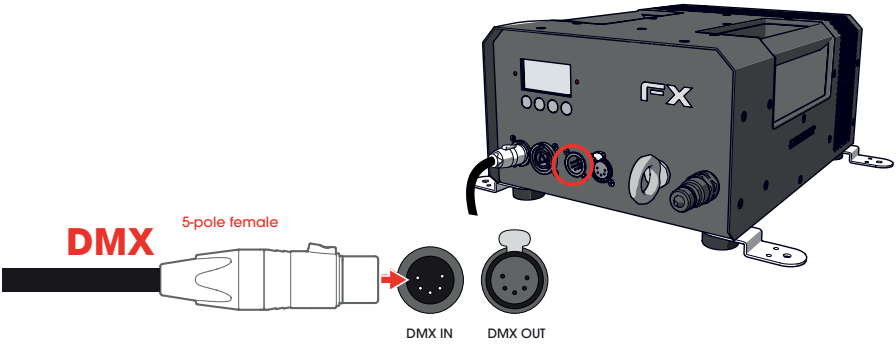

4. Connect the other end of the DMX cable to your DMX controller.
5. Use the display and buttons or a RDM controller to set the machine into RAW or PRESET mode and to assign DMX addresses, see chapter 1.

⚠ CAUTION Always plug in a DMX Terminator into the DMX output. Using a DMX Terminator improves signal reliability.

3.5 SETUP MULTIPLE MACHINES IN A SEQUENCE

1. Connect a power link cable to the power output.
2. Connect the other end to the power input of the next machine.

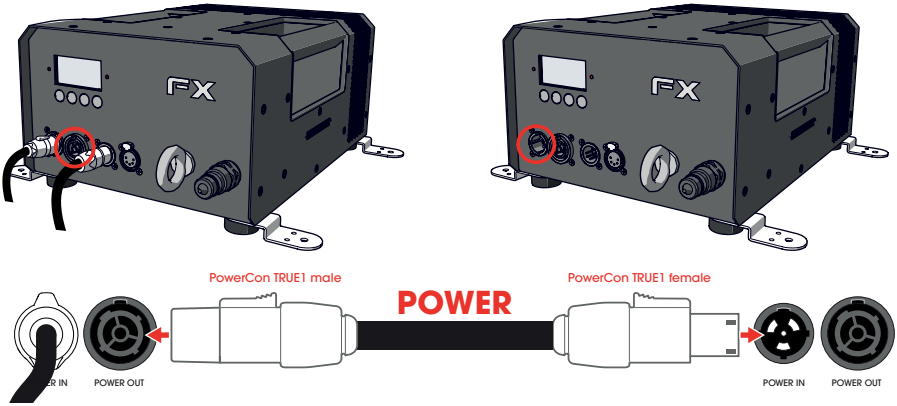

3. Connect a DMX cable to the DMX output.
4. Connect the other end to the DMX input of the next machine.

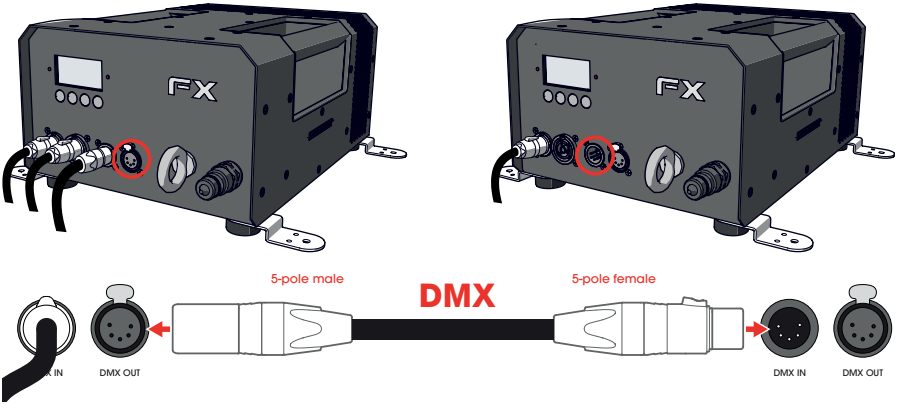

5. Use the display and buttons or a RDM controller to set the machine into RAW or PRESET mode and to assign DMX addresses, see chapter 1.
6. Repeat steps 1 – 5 for each subsequent machine.

⚠ CAUTION Always plug in a DMX Terminator into the DMX output of the final unit in the control sequence. Using a DMX Terminator improves signal reliability.

3.6 CONNECT CO_2

1 Make sure that the safety channel is deactivated (FX LED indicator on each machine is dimmed).

2 Connect the CO_2 hose to the CO_2 quick connector.

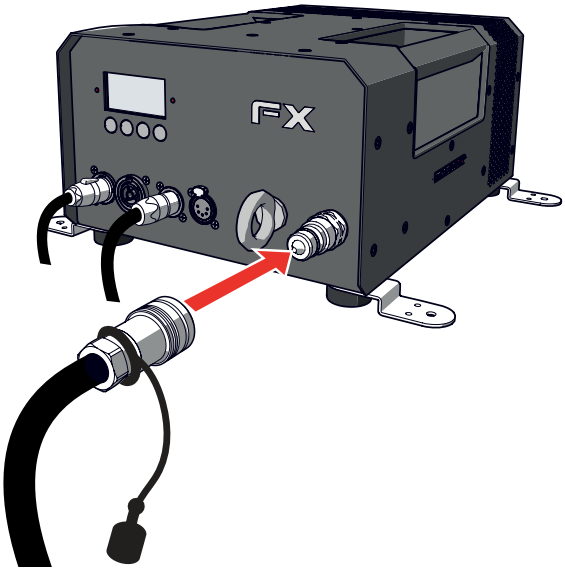

3 Connect a CO_2 Bottle to Hose Connector to a CO_2 cylinder.

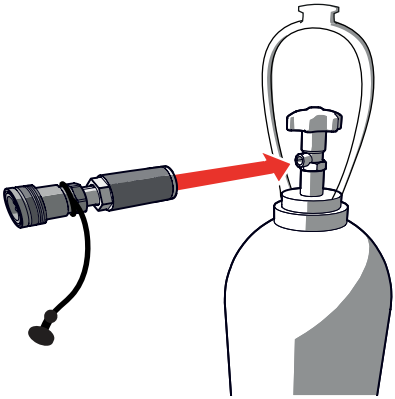

4 Connect the CO_2 hose to the CO_2 Bottle to Hose Connector on the CO_2 cylinder.

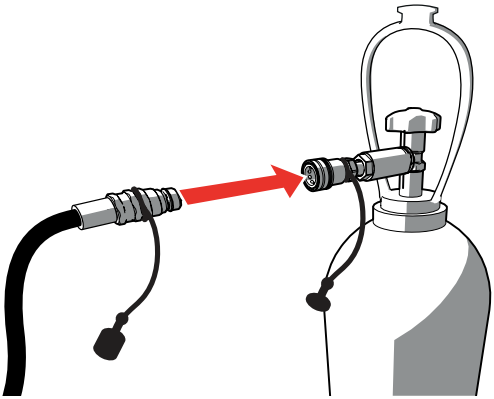

5 Open the CO_2 cylinder.

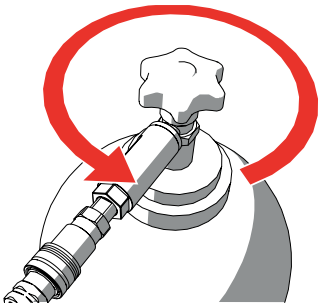

6 In case of multiple machines: Repeat steps 1 – 5 for each machine.

3.7 BLAST WITH DMX

1. Make sure that each safety zone is free from persons and hazardous objects.
2. Activate the Safety address. The FX LED indicator on each machine lights up.
3. When it's time to blast, activate the necessary operational addresses, see Chapter 1.
4. Enjoy the view!

5. When you are done with blasting, deactivate the operational addresses.
6. Deactivate the Safety address.

3.8 REPLACE A CO_2 CYLINDER

1 Make sure the safety address is not activated (FX LED indicator on each machine is dimmed).

2 Close the CO_2 cylinder.

In case of multiple machines, connected in series: Close all CO_2 cylinders.

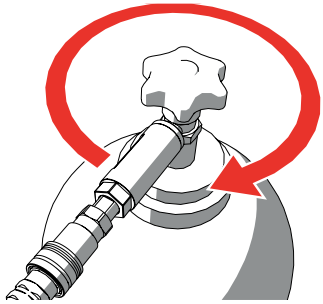

3 Activate the Safety address again. The FX LED indicator on each connected machine lights up.

4 Activate the Start address for CO_2 output to release the pressure from the system.

5 Deactivate all operational addresses.

6 Deactivate the Safety address.

7 Disconnect the CO_2 hose from the CO_2 Bottle to Hose Connector on the CO_2 cylinder.

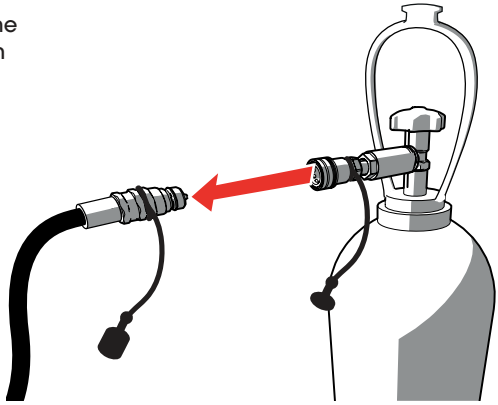

8 Remove the CO_2 Bottle to Hose Connector from the cylinder.

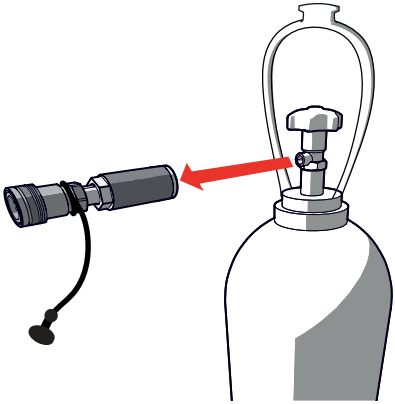

9 Connect a CO_2 Bottle to Hose Connector to a new CO_2 cylinder.

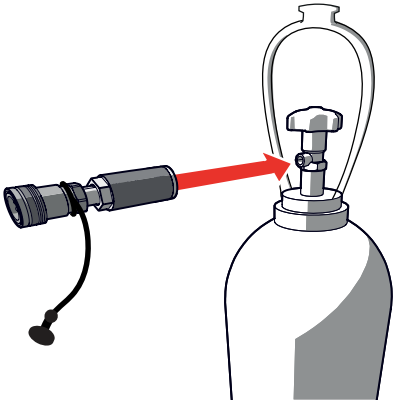

10 Connect the CO_2 hose to the CO_2 Bottle to Hose Connector on the new CO_2 cylinder.

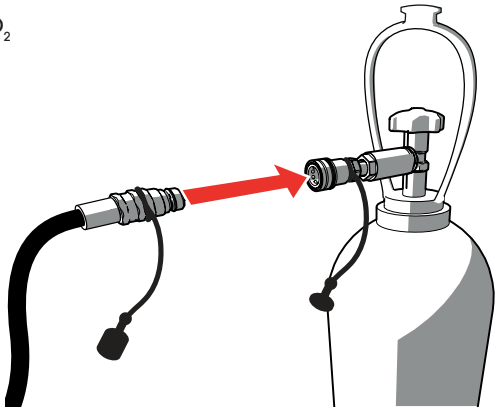

11 Open the CO_2 cylinder.

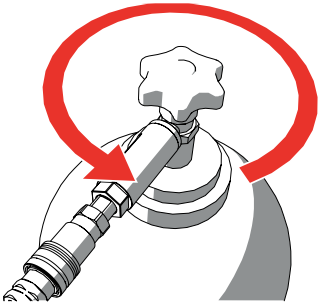

12 In case of multiple machines: Repeat steps 7 – 11 for each machine.

3.9 CLEAN UP

1. Make sure the safety address is not activated (FX LED indicator on each machine is dimmed).
2. Close the CO_2 cylinder. In case of multiple machines, connected in series: Close all CO_2 cylinders.

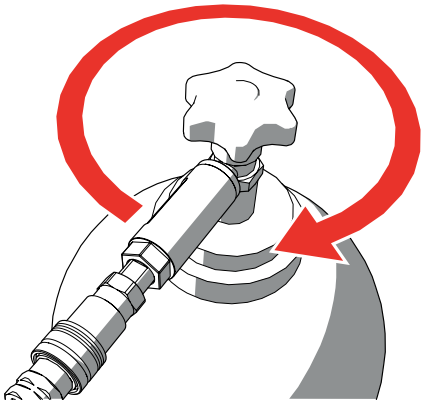

3. Activate the Safety address again. The FX LED indicator on each connected machine lights up.
4. Activate the Start address for CO_2 output to release the pressure from the system.
5. Deactivate all operational addresses.
6. Deactivate the Safety address.
7. Disconnect the CO_2 hose from the CO_2 quick connector on the machine.

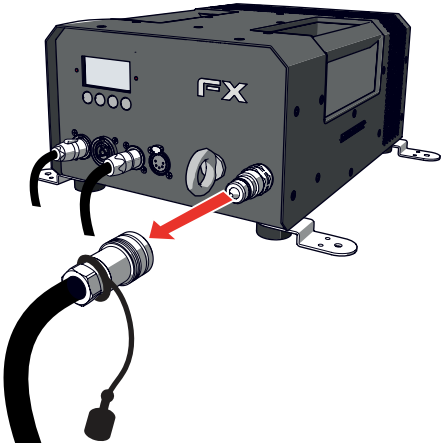

8. Disconnect the CO_2 hose from the CO_2 Bottle to Hose Connector on the CO_2 cylinder.

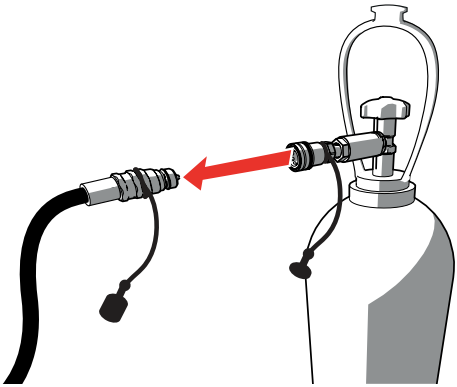

9. Remove the CO_2 Bottle to Hose Connector from the cylinder.

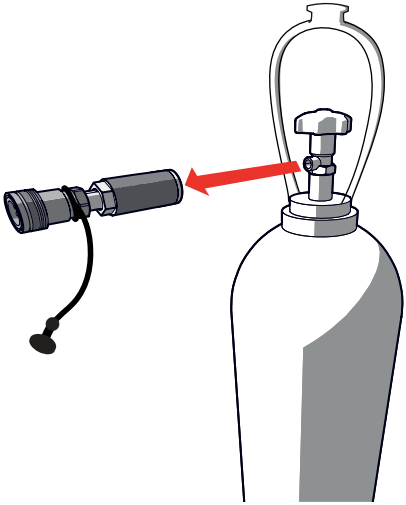

10. Disconnect DMX cable(s) and power cable(s).
11. Dismount the machine.

4 MAINTENANCE

To achieve the maximum service life of the MAGICFX® PSYCO2JET you must regularly clean the MAGICFX® PSYCO2JET and test if it is functioning correctly.

Contact MAGIC FX if the MAGICFX® PSYCO2JET is not functioning correctly.

⚠ DANGER Do not replace parts yourself; always consult MAGIC FX.

5 TROUBLESHOOTING

Always contact MAGIC FX if any malfunctions or errors occur that cannot be solved with the instructions as described in this manual.

6 CORRECT DISPOSAL

This symbol on the product and / or accompanying documents means that used electrical and electronic products should not be mixed with general household waste. For proper treatment, recovery and recycling, please take this product to designated collection points where it will be accepted free of charge.

Alternatively, in some countries you may be able to return your products to your local retailer upon purchase of an equivalent new product.

Disposing of this product correctly will help save valuable resources and prevent any potential negative effects on human health and the environment, which could otherwise arise from inappropriate waste handling.

Please contact your local authority for further details of your nearest designated collection point.

Penalties may be applicable for incorrect disposal of this waste, in accordance with your national legislation.

7 EC DECLARATION OF CONFORMITY

According to Annex III A Low Voltage Directive 2014/35/EU + Machinery Directive 2006/42/EC

MAGIC FX B.V. declares as manufacturer and composer of the technical construction file that the product with the following specifications:

Name machine	: PSYCO$_2$JET
Type	: MFX1117
Voltage	: 100-250Vac 50-60Hz
Serial number	: on product
Year of construction	: on product

Is in conformity with the minimal safety regulations as stated in the following directive(s):

- EMC (2014/30/EC) ElectroMagnetic Compatibility
- RoHS (2011/65/EU) Restriction of the use of certain Hazardous Substances
- WEEE (2012/19/EU) Waste Electrical & Electronic Equipment

The following harmonized standards were applied:

- NEN-EN-ISO 12100:2010 Safety of machinery - General principles for design - Risk assessment and risk reduction.
- NEN-EN-IEC 60204-1:2006, Safety of machinery - Electrical equipment of machines - Part 1: General requirements.
- NEN-EN-IEC 61000-6-3:2007/A1:2011, Electromagnetic compatibility (EMC) - Part 6-3: Generic standards - Emission standard for residential, commercial and light-industrial environments.

☐ Original declaration of conformity
☑ Translation of the original declaration of conformity

Name manufacturer	: MAGIC FX BV
Address	: Schouwrooij 27, 5281 RE BOXTEL
Country	: The Netherlands
CEO	: B. Veroude
Date	: 17-01-2017
Signature	:

MAGICFX®

WWW.MAGICFX.EU