USER AND INSTALLATION MANUAL

ENGLISH

MAG:CFX®

/FX-COMM4NDER®

CE

CONTROL GEAR

PART01174

rev 01-02

DISCLAIMER

⚠ WARNING	Read this manual carefully before installing and/or using this product. Failure to read the manual and to follow the printed instructions may lead to personal injury and/or damage to the product.

© 2019 MAGICFX®
All rights reserved.

Nothing from this publication may be copied, reproduced and/or published by means of printing, photocopying or by any other means, without the prior written approval of MAGIC FX.

MAGIC FX reserves the right to modify specifications stated in this manual.

TRADEMARKS

Any brand names mentioned in this manual are registered trademarks of their respective owners.

LIABILITY

MAGIC FX accepts no liability for claims from third parties arising from unauthorised use, use other than that stated in this manual, and use other than in accordance with the General Conditions registered at the Chamber of Commerce.

We further refer to the General Conditions. These are available on request, free of charge.

Although considerable care has been taken to ensure a correct and comprehensive description of all relevant components, the manual may nonetheless contain errors and inaccuracies.

Should you detect any errors or inaccuracies in the manual, we would be grateful if you would inform us. This helps us to further improve our documentation.

TABLE OF CONTENTS

Disclaimer		2
Trademarks		2
Liability		2
Foreword		4
Language		4
Revision table		4
1	**Meet the MAGICFX® FX-COMM4NDER!**	**5**
1.1	**Main parts**	**5**
1.2	**Product identification**	**5**
1.3	**Technical data**	**6**
1.4	**Accessories**	**6**
2	**Fire safely!**	**7**
2.1	**General safety rules**	**7**
2.2	**Connecting FX-machines**	**7**
2.3	**Precautions for operation**	**7**
3	**Let's fire!**	**8**
3.1	**Connect the controller**	**8**
3.2	**Fire**	**10**
3.3	**Clean up**	**12**
4	**Maintenance**	**13**
5	**Troubleshooting**	**13**
6	**Correct disposal**	**13**
7	**EC Declaration of Conformity**	**14**

FOREWORD

Congratulations! You have bought a great new product from MAGIC FX.

This manual contains all information required for the intended use of the equipment. Deviation from the described intended use can result in a hazardous situation and/or property damage.

This manual includes notes and warnings on safe operation of the equipment. These notes and warnings are accompanied by the following icons. Read them attentively!

⚠ DANGER	Indicates a hazardous situation that, if not avoided, will result in death or serious injury. This signal word is to be limited to the most extreme situations.
⚠ WARNING	Indicates a hazardous situation that, if not avoided, could result in death or serious injury.
⚠ CAUTION	Indicates a hazardous situation that, if not avoided, could result in minor or moderate injury.
NOTICE	Indicates information considered important, but not hazard-related (e.g. messages relating to property damage).

LANGUAGE

This document contains the original instructions in English. In case you require other languages please contact MAGIC FX.

REVISION TABLE

Doc nr	Revision	Date	Description	Author	Approved
PART01174	01-00	14-11-2017	Initail release	MBO	TVA
PART01174	01-01	01-08-2019	A4 to A5 format	TFR	TVA
PART01174	01-02	30-09-2020	Changed accessories	NvE	LL

1 MEET THE MAGICFX® FX-COMM4NDER!

The MAGICFX® FX-COMM4NDER is a 4 channel controller for 100 – 250 Vac ON/OFF special effects machines. You can fire multiple machines one at a time or simultaneously.

1.1 MAIN PARTS

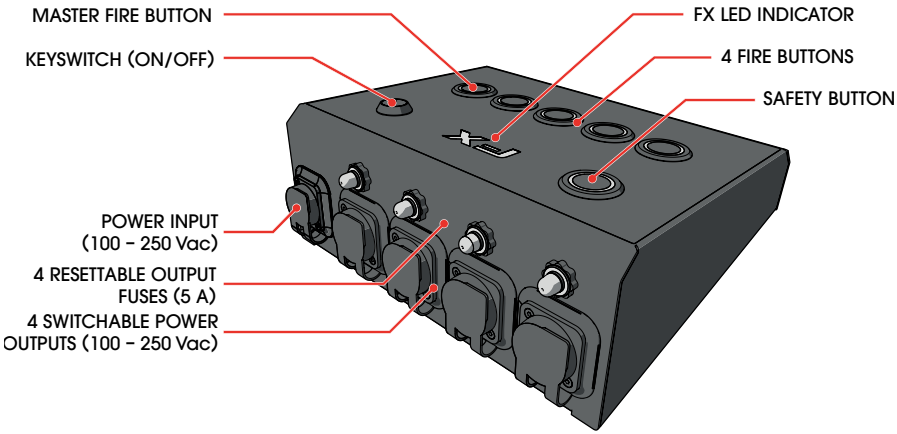

Main parts

1.2 PRODUCT IDENTIFICATION

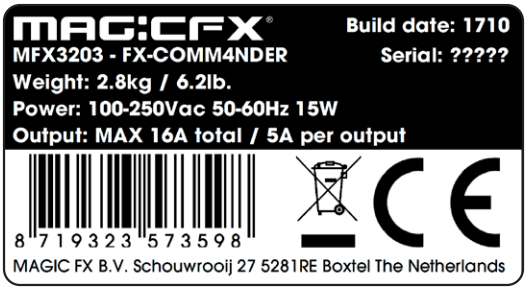

Type plate

1.3 TECHNICAL DATA

Product	Product Name	MAGICFX® FX-COMM4NDER	
	Product Code	MFX3203	
	Product Type	CONTROL GEAR	
Main Dimensions	Length	205 mm	8.1 in
	Width	250 mm	9.8 in
	Height	102 mm	4.0 in
Weight	Weight	2.8 kg	6.2 lb
Package	Length	348 mm	13.1 in
	Width	303 mm	11.4 in
	Height	208 mm	7.6 in
	Packaged weight	3.1 kg	6.8 lb
Environment	Minimum Temperature	-10 °C	14 °F
	Maximum Temperature	50 °C	122 °F
Electrical	Voltage Input	100 – 250 Vac	
	Voltage Frequency	50 – 60 Hz	
	Power Consumption	15 W	
	Power Connector	Neutrik® powerCON TRUE1 (in & out)	
	Power Output MAX	5 A per output with resettable output fuse (max. 16 A in total)	
Controlling	Control Options	Manual	

Technical data

1.4 ACCESSORIES

Code	Product	Included
MFX0311	Neutrik® powerCON TRUE1 - Male to Female - Link cable 10 m	
MFX0312	Neutrik® powerCON TRUE1 - Male to Female - Link cable 20 m	
MFX0322	Neutrik® powerCON TRUE1 - Male to Female - Link cable 0.5 m	
MFX0323	Neutrik® powerCON TRUE1 - Male to Female - Link cable 1.5 m	
MFX0324	Neutrik® powerCON TRUE1 - Male to Female - Link cable 3 m	
MFX0325	Neutrik® powerCON TRUE1 - Male to Female - Link cable 5 m	
MFX0326	Neutrik® powerCON TRUE1 - Male to Female - Link cable 15 m	
MFX0313	Schuko to Neutrik® powerCON TRUE1 - cable 1.5 m	

Accessories

2 FIRE SAFELY!

The MAGICFX® FX-COMM4NDER has been designed and constructed in such a manner that it can be used safely. This applies to the use, the circumstances and the regulations as described in this documentation. Reading this documentation and following the instructions are therefore necessary for everyone who is authorised to work with the MAGICFX® FX-COMM4NDER.

The MAGICFX® FX-COMM4NDER must be used in surroundings that:

- Have a stable temperature of between -10 and 50 °C.
- Are free of dust, corrosive gases and high concentrations of organic vapours.
- Are not situated in the vicinity of a source of vibration.

2.1 GENERAL SAFETY RULES

- Only authorised persons may carry out work with the MAGICFX® FX-COMM4NDER.
- Do not use the MAGICFX® FX-COMM4NDER if there are people or animals in the direct output.
- Make sure that children, unauthorised people and animals do not obtain access to the MAGICFX® FX-COMM4NDER.
- Make sure there are no freestanding objects or objects that can be damaged by the connected machines within the output distance.
- Do not remove any safeguards, safety caps and safety symbols.
- All required safety devices must be in good condition and function properly.
- Ensure sufficient lighting of the surroundings.
- Keep the workplace clean.
- Refer to the manual(s) of the connected machine(s) for safety instructions concerning the use of those machines.

2.2 CONNECTING FX-MACHINES

The voltage and frequency connected to the power input of the MAGICFX® FX-COMM4NDER are also the voltage and frequency of the switchable power outputs. With a maximum electric current per switchable output (see Chapter 1.2 Technical Data), a deviant input voltage or frequency may cause connected FX-machines to not work properly. The switchable output cannot deliver the power the FX-machine might require.

2.3 PRECAUTIONS FOR OPERATION

⚠ WARNING	Using a damaged controller can lead to death, serious injury or property damage. Always inspect the controller thoroughly before operation.

⚠ WARNING	Unauthorized operation of the controller can lead to death, serious injury or property damage. Never leave the controller unattended when the machine is ready for use.

3 LET'S FIRE!

3.1 CONNECT THE CONTROLLER

⚠ CAUTION Do not connect FX-machines to the switchable power output(s) when the output cannot deliver sufficient power to the FX-machine. See Chapter 2.

1 Place the controller on a stable surface in a suitable area.

2 Make sure the keyswitch is in the 'OFF' position.

3 Connect the PowerCon TRUE1 power cable to the power input of the controller.

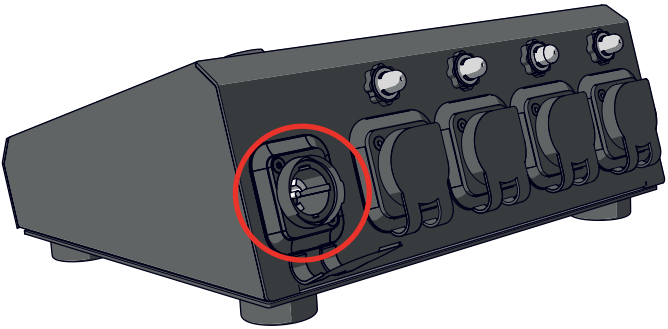

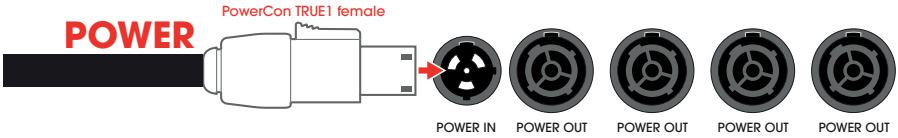

4 Connect the other end to a power outlet.

5 Connect up to four FX-machines to the controller with PowerCon TRUE1 link cables.

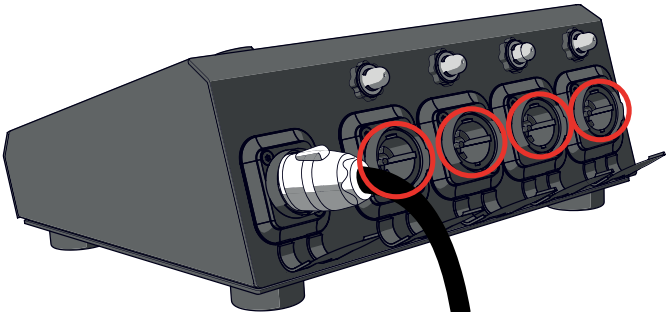

6 Remove the key from the keyswitch when you leave the controller unattended.

3.2 FIRE

1 Place the key in the keyswitch and set the keyswitch in the 'ON' position.

All buttons light up white.

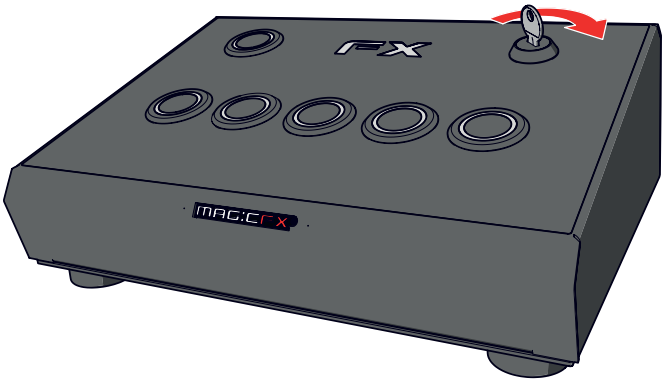

2 Press the safety button.

The FX LED indicator and the safety button light up red.

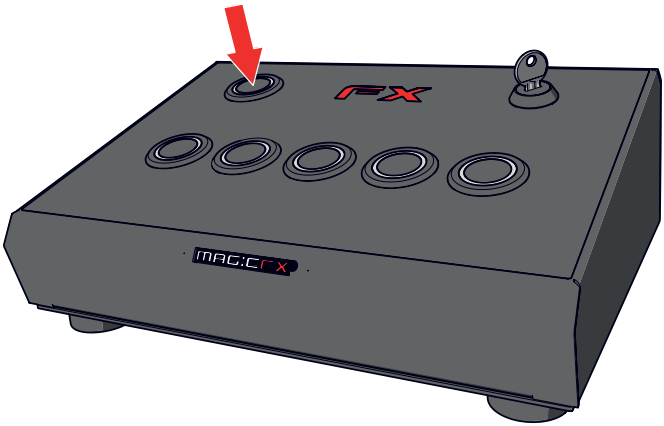

NOTICE You cannot activate the safety button when other buttons are pressed. Make sure all buttons are released when trying to activate the safety button.

3 Press any of the fire buttons to fire the machine connected to the respective output.

The pressed fire button lights up red.

Alternatively, press the master fire button to fire all connected machines simultaneously.

All fire buttons light up red.

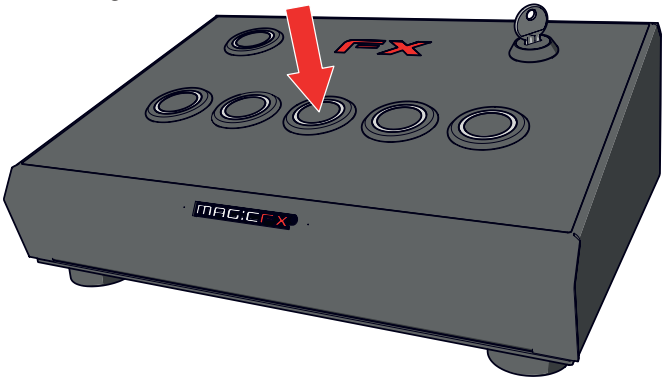

4 Enjoy the view!

5 When you are done with firing, press the safety button to deactivate the fire buttons.

The FX LED indicator turns off.

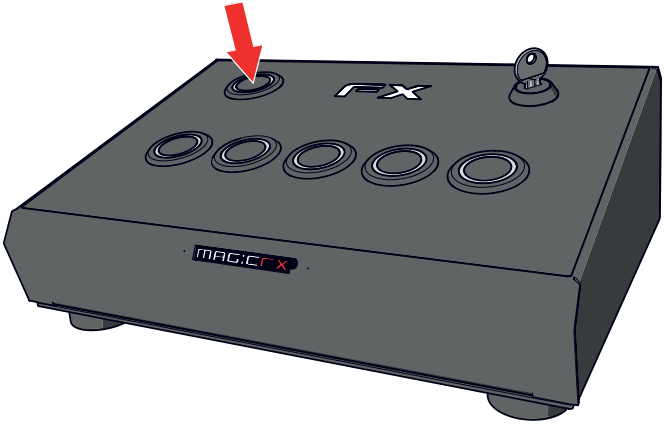

3.3 CLEAN UP

1 Make sure the FX LED indicator is turned off.

Set the keyswitch to the 'OFF' position.

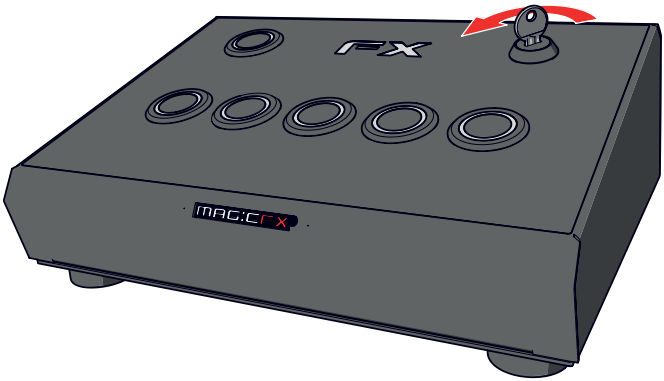

2 First disconnect the power cable from the FX-COMM4NDER. Then disconnect the link cables.

3 Remove the machine.

4 MAINTENANCE

To achieve the maximum service life of the MAGICFX® FX-COMM4NDER you must regularly clean the MAGICFX® FX-COMM4NDER and test if it is functioning correctly.

Contact MAGIC FX if the MAGICFX® FX-COMM4NDER is not functioning correctly.

⚠ DANGER Do not replace parts yourself; always consult MAGIC FX.

5 TROUBLESHOOTING

Always contact MAGIC FX if any malfunctions or errors occur that cannot be solved with the instructions as described in this manual.

6 CORRECT DISPOSAL

This symbol on the product and / or accompanying documents means that used electrical and electronic products should not be mixed with general household waste. For proper treatment, recovery and recycling, please take this product to designated collection points where it will be accepted free of charge.

Alternatively, in some countries you may be able to return your products to your local retailer upon purchase of an equivalent new product.

Disposing of this product correctly will help save valuable resources and prevent any potential negative effects on human health and the environment, which could otherwise arise from inappropriate waste handling.

Please contact your local authority for further details of your nearest designated collection point.

Penalties may be applicable for incorrect disposal of this waste, in accordance with your national legislation.

7 EC DECLARATION OF CONFORMITY

MAGIC FX B.V. declares as manufacturer and composer of the technical construction file that the product with the following specifications:

Name machine	: FX-COMM4NDER
Type	: MFX3203
Voltage	: 100-250Vac 50-60Hz
Serial number	: on product
Year of construction	: on product

Is in conformity with the minimal safety regulations as stated in the following directive(s):

- EMC (2014/30/EC) ElectroMagnetic Compatibility
- RoHS (2011/65/EU) Restriction of the use of certain Hazardous Substances
- WEEE (2012/19/EU) Waste Electrical & Electronic Equipment

The following harmonized standards were applied:

- NEN-EN-ISO 12100:2010, Safety of machinery - General principles for design - Risk assessment and risk reduction.
- NEN-EN-IEC 60204:2010, Safety of machinery - Electrical equipment of machines - Part 1: General requirements.
- NEN-EN-IEC 61000-6-3:2007/A1:2011, Electromagnetic compatibility (EMC) - Part 6-3: Generic standards - Emission standard for residential, commercial and light-industrial environments.

☐ Original declaration of conformity
☑ Translation of the original declaration of conformity

Name manufacturer	: MAGIC FX BV
Address	: Schouwrooij 27, 5281 RE BOXTEL
Country	: The Netherlands
CEO	: B. Veroude
Date	: 6-10-2017
Signature	:

MAGICFX®

WWW.MAGICFX.EU