USER AND INSTALLATION MANUAL

ENGLISH

MAGICFX®

/CONFETTI GUN

CONFETTI & STREAMER FX

PART00086
rev 01-01

DISCLAIMER

⚠ WARNING	Read this manual carefully before installing and/or using this product. Failure to read the manual and to follow the printed instructions may lead to personal injury and/or damage to the product.

© 2019 MAGICFX®
All rights reserved.

Nothing from this publication may be copied, reproduced and/or published by means of printing, photocopying or by any other means, without the prior written approval of MAGIC FX.

MAGIC FX reserves the right to modify specifications stated in this manual.

TRADEMARKS

Any brand names mentioned in this manual are registered trademarks of their respective owners.

LIABILITY

MAGIC FX accepts no liability for claims from third parties arising from unauthorised use, use other than that stated in this manual, and use other than in accordance with the General Conditions registered at the Chamber of Commerce.

We further refer to the General Conditions. These are available on request, free of charge.

Although considerable care has been taken to ensure a correct and comprehensive description of all relevant components, the manual may nonetheless contain errors and inaccuracies.

Should you detect any errors or inaccuracies in the manual, we would be grateful if you would inform us. This helps us to further improve our documentation.

TABLE OF CONTENTS

Disclaimer		2
Trademarks		2
Liability		2
Foreword		4
Language		4
Revision table		4
1	**Meet the MAGICFX® CONFETTI GUN!**	**5**
1.1	**Main parts**	**5**
1.2	**Electric cannons**	**5**
1.3	**Product identification**	**6**
1.4	**Technical data**	**6**
2	**Shoot safely!**	**7**
2.1	**General safety rules**	**7**
2.2	**Noise level**	**7**
2.3	**Safety symbols**	**8**
2.4	**Precautions for operation**	**8**
3	**Let's shoot!**	**9**
4	**Troubleshooting**	**16**
5	**Maintenance**	**16**
6	**Correct disposal**	**16**
7	**Declaration of Conformity**	**17**

FOREWORD

Congratulations! You have bought a great new product from MAGIC FX.

This manual contains all information required for the intended use of the equipment. Deviation from the described intended use can result in a hazardous situation and/or property damage.

This manual includes notes and warnings on safe operation of the equipment. These notes and warnings are accompanied by the following icons. Read them attentively!

⚠ **DANGER**	Indicates a hazardous situation that, if not avoided, will result in death or serious injury. This signal word is to be limited to the most extreme situations.
⚠ **WARNING**	Indicates a hazardous situation that, if not avoided, could result in death or serious injury.
⚠ **CAUTION**	Indicates a hazardous situation that, if not avoided, could result in minor or moderate injury.
NOTICE	Indicates information considered important, but not hazard-related (e.g. messages relating to property damage).

LANGUAGE

This document contains the original instructions in English. In case you require other languages please contact MAGIC FX.

REVISION TABLE

Doc nr	Revision	Date	Description	Author	Approved
PART00086	01-00	29-08-2017	Initial release	TFR	TVA
PART00086	01-01	01-08-2019	A4 to A5 format, illustration color changes, laser warning	TFR	TVA

1 MEET THE MAGICFX® CONFETTI GUN!

The MAGICFX® CONFETTI GUN is a handheld gun-shaped electronic device for safe shooting of MAGICFX® electric cannons.

Before operation one, two or three electric cannons need to be loaded into the barrel(s) of the MAGICFX® CONFETTI GUN. Each cannon is held in place in the barrel with a thumb screw. Each barrel is equipped with a connector for the power cable of the cannon. When the user pulls the trigger, the reloadable battery inside provides a current to the cannon through this connection. This releases the pressurized nitrogen in the bottom part of the cannon, shooting the load into the air.

The MAGICFX® CONFETTI GUN can be operated in Single Shot or Full Shot mode. Furthermore the gun is equipped with a built-in laser and a shoulder belt. With a fully loaded battery the MAGICFX® CONFETTI GUN provides about 1 000 (single) shots.

1.1 MAIN PARTS

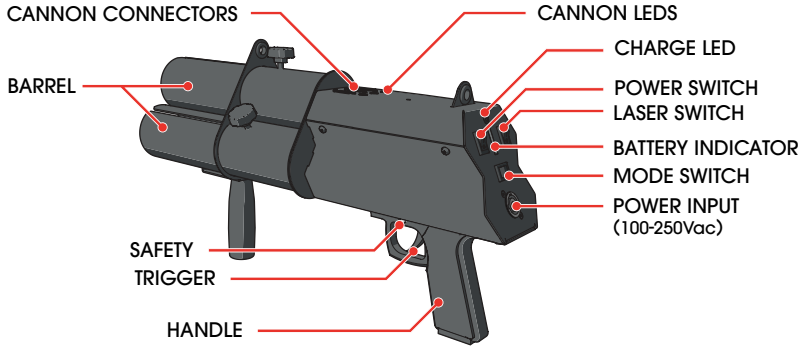

Main parts

1.2 ELECTRIC CANNONS

All Electric Cannons (50 cm and 80 cm) from MAGIC FX are compatible with the MAGICFX® CONFETTI GUN. Check the website of MAGIC FX or contact your local dealer for ordering information.

1.3 PRODUCT IDENTIFICATION

Type plate

1.4 TECHNICAL DATA

Product	Product Name	MAGICFX® CONFETTI GUN	
	Product Code	MFX0370	
	Product Type	CONFETTI & STREAMER FX	
Main Dimensions	Length	473 mm	18.6 in
	Width	144 mm	5.7 in
	Height	271 mm	10.7 in
Weight	Empty weight	4.5 kg	9.9 lb
Package	Length	500 mm	19.7 in
	Width	300 mm	11.8 in
	Height	220 mm	8.7 in
	Packaged weight	5.1 kg	11.2 lb
Environment	Minimum Temperature	0 °C	32 °F
	Maximum Temperature	50 °C	122 °F
	Humidity (Relative)	20 % to 90 % (non condensing)	
Electrical	Voltage Input	100 – 250 Vac	
	Voltage Frequency	50 – 60 Hz	
	Power Consumption	10 W	
	Power Connector	Neutrik® powerCON 20 A (in)	
	Battery	3S LiPo (11.1 Vdc) 2.2 Ah 45C	
Laser	Type of laser	Class II	
Controlling	Control Options	Manual Trigger	
Usage	Consumable(s)	MAGICFX® Electric Cannons	

Technical data

2 SHOOT SAFELY!

The MAGICFX® CONFETTI GUN has been designed and constructed in such a manner that it can be used safely. This applies to the use, the circumstances and the regulations as described in this documentation. Reading this documentation and following the instructions are therefore necessary for everyone who works with the MAGICFX® CONFETTI GUN.

The MAGICFX® CONFETTI GUN must be used in surroundings that:

- Have a stable temperature of between +0 and 50 °C.
- Have a relative humidity degree between 20 % and 90 % (non condensing).
- Are free of dust, corrosive gases and high concentrations of organic vapours.
- Are not situated in the vicinity of a source of vibration.

2.1 GENERAL SAFETY RULES

- Only authorised persons may work with the MAGICFX® CONFETTI GUN.
- Do not use the MAGICFX® CONFETTI GUN if there are people or animals in the direct output.
- Make sure that children, unauthorised people and animals do not obtain access to the MAGICFX® CONFETTI GUN.
- Make sure there are no freestanding objects or objects that can be damaged by the MAGICFX® CONFETTI GUN within the output distance.
- Do not remove any safeguards, safety caps and safety symbols.
- Always keep the laser beam away from heads and eyes of people and animals.
- All required safety devices must be in good condition and function properly.
- Ensure sufficient lighting of the surroundings.
- Keep the workplace clean.

2.2 NOISE LEVEL

The environmental noise level measured at 20 cm (7.87 in) from the product is 92 dB(A) for a single shot and 98 dB(A) for a full shot. This level of noise is only reached during the short shooting instances. Therefore hearing protection is not necessary.

⚠ WARNING	Do not operate the MAGICFX® CONFETTI GUN close to yourself or to others for a long period of time. If you experience any hearing loss or ringing in the ears, you should immediately stop using the unit.

2.3 SAFETY SYMBOLS

Symbol	Meaning	Position
	The gun contains a Class II laser product. The laser beam can cause distraction, flashblindness or eye damage. Do not stare into the beam.	Top of the gun

Safety symbols

2.4 PRECAUTIONS FOR OPERATION

⚠ WARNING Using a damaged gun can lead to serious injury and property damage. Always inspect the gun thoroughly before operation.

⚠ WARNING Using a damaged, used or an improper installed electric cannon can lead to serious injury and property damage. Always inspect the cannon thoroughly before operation.

⚠ CAUTION The gun contains a Class II laser product. The laser beam can cause distraction, flashblindness or eye damage. Do not aim the laser towards heads and eyes of people and animals. Do not aim the laser towards an aircraft or a vehicle that is in motion. Do not stare into the beam.

⚠ WARNING Missing or obscured safety symbols on the machine can lead to death or serious injury. Make sure all safety symbols are correctly in place, see section 2.3.

3 LET'S SHOOT!

1 Check the battery level before use and charge the internal battery when necessary. For charging connect the unit to a power outlet with a PowerCON power cable.

The Charge LED lights up red, indicating that the unit is being charged. The gun is fully charged in approximately 8 hours.

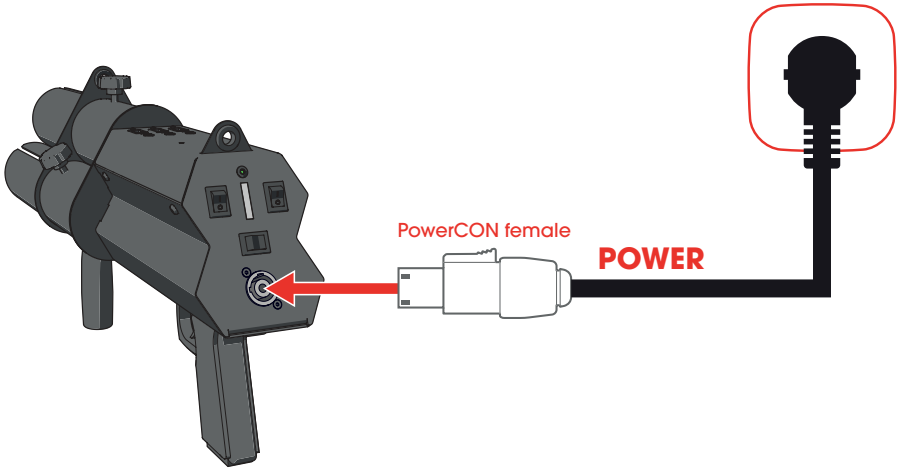

2 When the Charge LED turns green, unplug the power cable.

3 Make sure that the gun is switched OFF and the safety is in locking position.

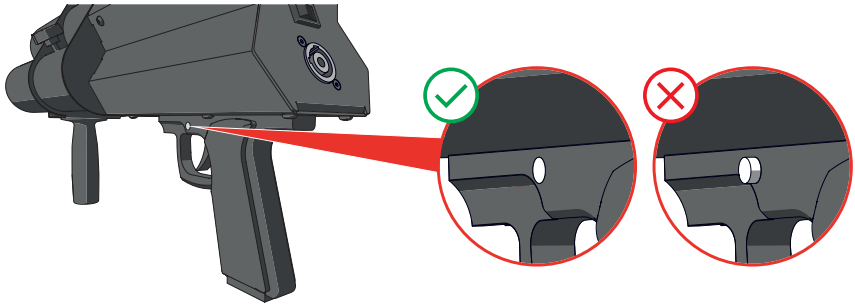

4 Place an unused electric cannon in the barrel with the cable facing upwards.

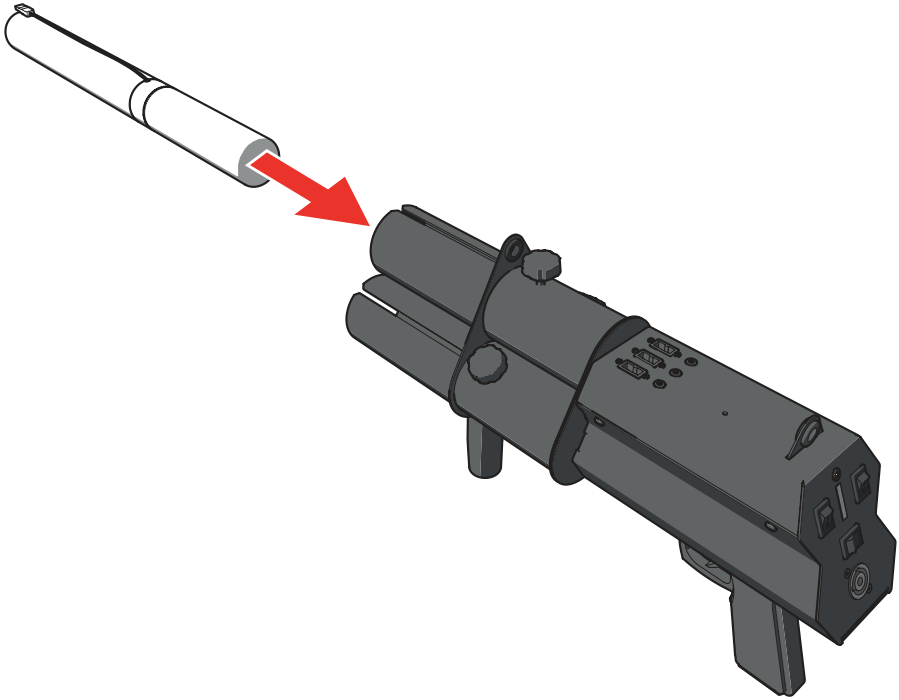

5 Lock the cannon in the barrel with the thumb screw.

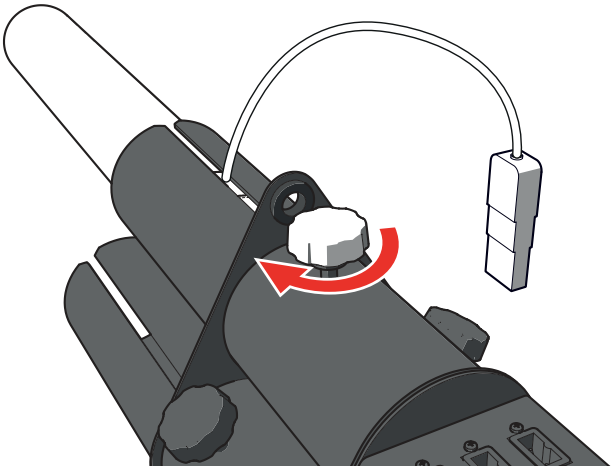

6 Connect the power cable of the electric cannon.

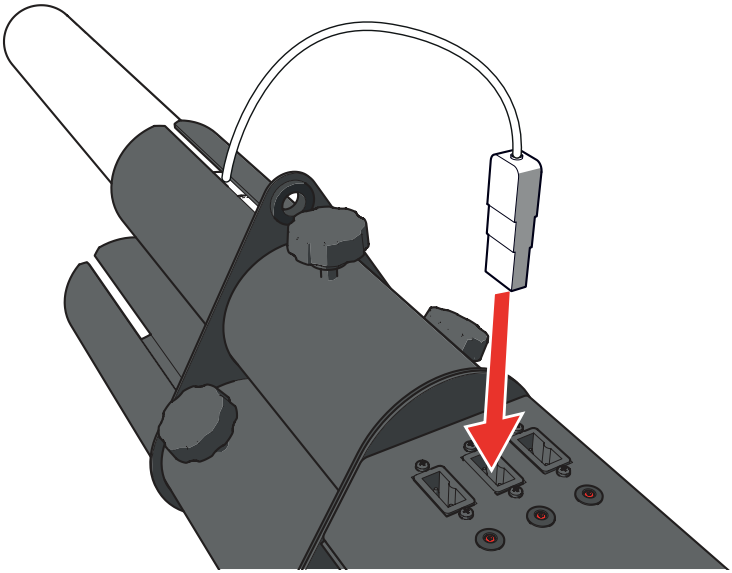

7 Repeat steps 4 to 6 for each cannon.

8 Carefully walk to the desired shooting position.

9 Switch ON the MAGICFX® CONFETTI GUN. The LED of each available cannon starts blinking.

Blinking	Cannon is available for shooting
Solid	Cannon is unused and NOT yet available for shooting (in Single Shot mode)
No light	Cannon is NOT available for shooting (not connected or already fired)

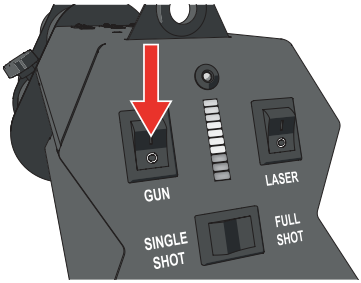

10 Select Single Shot or Full Shot mode.

Single Shot	Fire cannons one after another
Full Shot	Fire all cannons at once

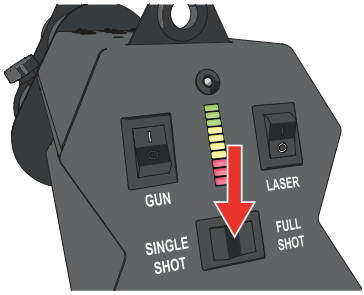

11 Release the safety.

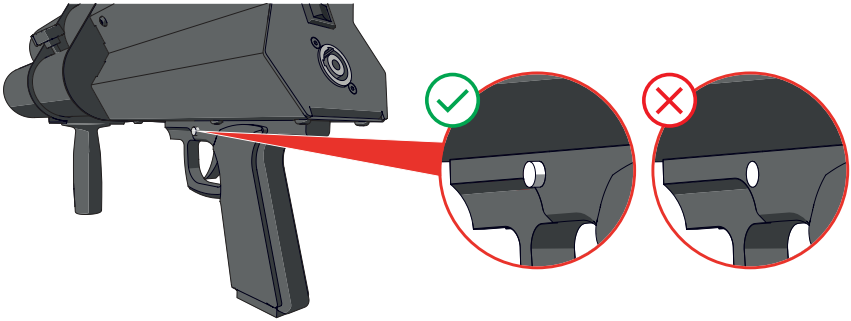

12 Firmly hold the gun with two hands and aim above the audience.

Make sure there are no persons or animals in the direct output of the MAGICFX® CONFETTI GUN.

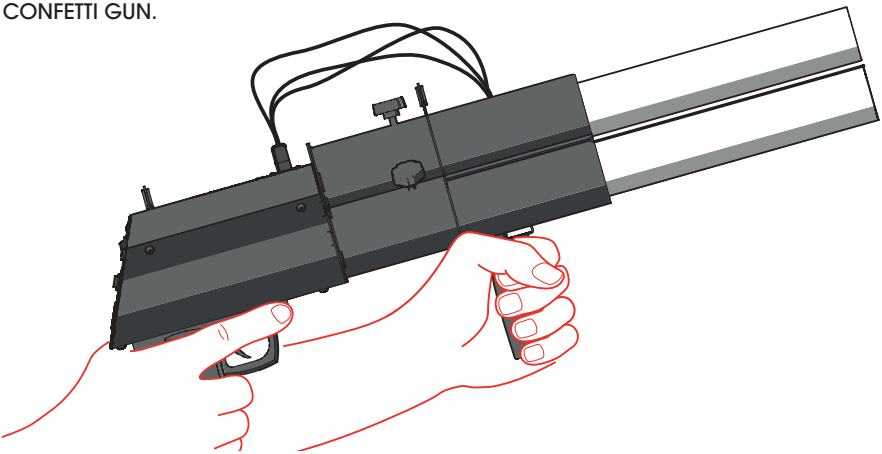

13 Activate the laser beam for extra effect.

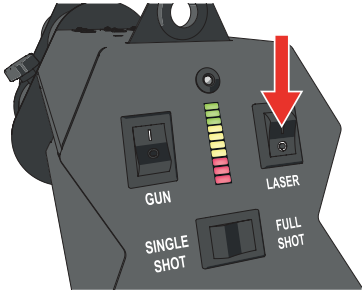

⚠ CAUTION Do not aim the laser towards heads and eyes of people and animals.

14 When it's time to shoot, pull the trigger.

15 Press the safety back in locking position and switch OFF the MAGICFX® CONFETTI GUN.

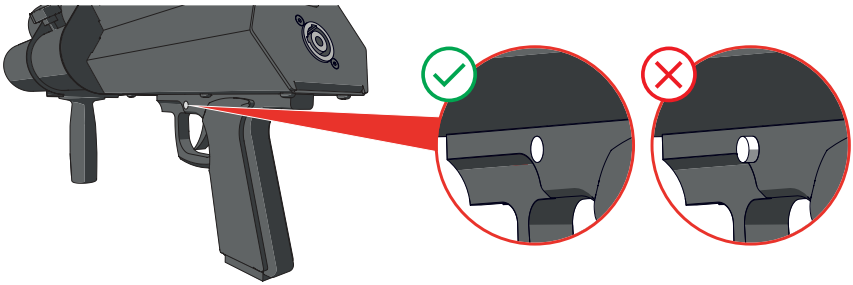

16 Deactivate the laser beam if switched on.

17 Enjoy the view.

18 Disconnect the power cable of a used electric cannon.

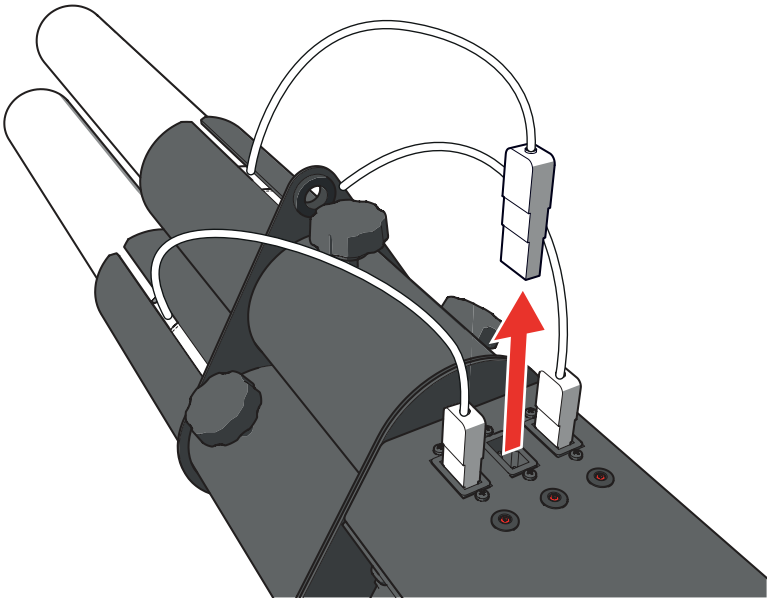

19 Release the thumb screw that holds the cannon in the barrel.

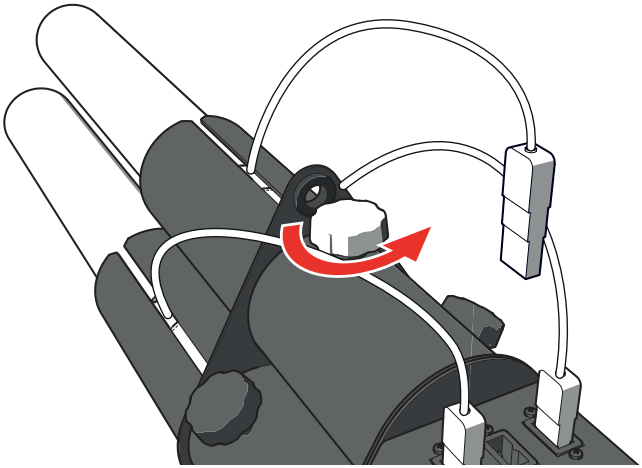

20 Place an unused electric cannon in the barrel with the cable facing upwards.

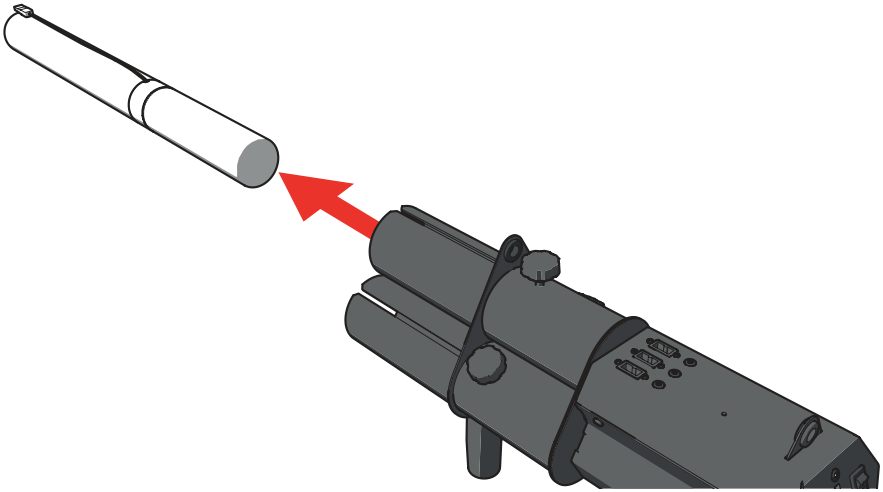

21 Repeat steps 17 to 19 for each used cannon.

22 Reload, recharge or store the MAGICFX® CONFETTI GUN.

4 TROUBLESHOOTING

Always contact MAGIC FX if any malfunctions or errors occur that cannot be solved with the instructions as described in this manual.

5 MAINTENANCE

To achieve the maximum service life of the MAGICFX® CONFETTI GUN you must regularly clean the MAGICFX® CONFETTI GUN and test if it is functioning correctly.

Contact MAGIC FX if the MAGICFX® CONFETTI GUN is not functioning correctly.

⚠ **DANGER**	Do not replace parts yourself. Always consult MAGIC FX if necessary.

6 CORRECT DISPOSAL

This symbol on the product and/or accompanying documents means that used electrical and electronic products should not be mixed with general household waste. For proper treatment, recovery and recycling, please take this product to designated collection points where it will be accepted free of charge.

Alternatively, in some countries you may be able to return your products to your local retailer upon purchase of an equivalent new product.

Disposing of this product correctly will help save valuable resources and prevent any potential negative effects on human health and the environment, which could otherwise arise from inappropriate waste handling.

Please contact your local authority for further details of your nearest designated collection point.

Penalties may be applicable for incorrect disposal of this waste, in accordance with your national legislation.

7 DECLARATION OF CONFORMITY

(According to Annex III A Low Voltage Directive 2014/35/EU + Machinery Directive 2006/42/EC)

MAGIC FX B.V. declares as manufacturer and composer of the technical construction file that the product with the following specifications:

Name machine : CONFETTI GUN
Type : MFX0370
Voltage : 100-250Vac 50-60Hz
Serialnumber : on product
Year of construction : on product

Is in conformity with the minimal safety regulations as stated in the following directive(s):

EMC (2014/30/EC) ElectroMagnetic Compatibility
RoHS (2011/65/EU) Restriction of the use of certain Hazardous Substances
WEEE (2012/19/EU) Waste Electrical & Electronic Equipment

The following harmonized standards were applied:

NEN-EN-ISO 12100:2010 Safety of machinery - General principles for design - Risk assessment and risk reduction.

NEN-EN-IEC 60204-1:2006, Safety of machinery - Electrical equipment of machines - Part 1: General requirements.

NEN-EN-IEC 61000-6-3:2007/A1:2011, Electromagnetic compatibility (EMC) - Part 6-3: Generic standards - Emission standard for residential, commercial and light-industrial environments.

☐ Original declaration of conformity
☑ Translation of the original declaration of conformity

Name manufacturer : MAGIC FX BV
Address : Schouwrooij 27, 5281 RE BOXTEL
Country : The Netherlands

CEO : B. Veroude
Date : 13-01-2017
Signature :

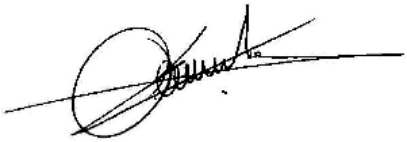

MAGICFX®

WWW.MAGICFX.EU