USER AND INSTALLATION MANUAL

ENGLISH

MAGICFX®

/STADIUM BLASTER.®

CE

CONFETTI & STREAMER FX

PART01104

rev 01-05

DISCLAIMER

⚠ WARNING Read this manual carefully before installing and/or using this product. Failure to read the manual and to follow the printed instructions may lead to personal injury and/or damage to the product.

© 2019 MAGICFX®
All rights reserved.

Nothing from this publication may be copied, reproduced and/or published by means of printing, photocopying or by any other means, without the prior written approval of MAGIC FX.

MAGIC FX reserves the right to modify specifications stated in this manual.

TRADEMARKS

Any brand names mentioned in this manual are registered trademarks of their respective owners.

LIABILITY

MAGIC FX accepts no liability for claims from third parties arising from unauthorised use, use other than that stated in this manual, and use other than in accordance with the General Conditions registered at the Chamber of Commerce.

We further refer to the General Conditions. These are available on request, free of charge.

Although considerable care has been taken to ensure a correct and comprehensive description of all relevant components, the manual may nonetheless contain errors and inaccuracies.

Should you detect any errors or inaccuracies in the manual, we would be grateful if you would inform us. This helps us to further improve our documentation.

TABLE OF CONTENTS

Disclaimer		2
Trademarks		2
Liability		2
Foreword		4
Language		4
1	**Meet the MAGICFX® STADIUMBLASTER!**	**5**
1.1	Main parts	5
1.2	Technical data	6
1.3	Product identification	7
1.4	Accessories	7
1.5	Confetti	7
1.6	DMX control	8
1.7	Display panel	8
1.8	RDM capability	11
2	**Blast safely!**	**11**
2.1	General safety rules	12
2.2	CO_2	12
2.3	Indoor use	12
2.4	Rigging	13
2.5	Noise level	13
2.6	Safety symbols	13
2.7	Precautions for operation	14
3	**Let's blast!**	**15**
3.1	Install the machine	15
3.2	Fill with confetti before each blast	21
3.3	Blast manually	22
3.4	Connect 24 V Control	24
3.5	Blast with 24 V Control	24
3.6	Connect power and setup DMX	25
3.7	Setup multiple machines in a sequence with DMX	26
3.8	Blast with DMX	26
3.9	Replace a CO_2 cylinder	27
3.10	Clean up	29
4	**Maintenance**	**35**
5	**Troubleshooting**	**35**
6	**Correct disposal**	**35**
7	**EC Declaration of Conformity**	**36**

FOREWORD

Congratulations! You have bought a great new product from MAGIC FX.

This manual contains all information required for the intended use of the equipment. Deviation from the described intended use can result in a hazardous situation and/or property damage.

This manual includes notes and warnings on safe operation of the equipment. These notes and warnings are accompanied by the following icons. Read them attentively!

⚠ DANGER	Indicates a hazardous situation that, if not avoided, will result in death or serious injury. This signal word is to be limited to the most extreme situations.
⚠ WARNING	Indicates a hazardous situation that, if not avoided, could result in death or serious injury.
⚠ CAUTION	Indicates a hazardous situation that, if not avoided, could result in minor or moderate injury.
NOTICE	Indicates information considered important, but not hazard-related (e.g. messages relating to property damage).

LANGUAGE

This document contains the original instructions in English. In case you require other languages please contact MAGIC FX.

REVISION TABLE

Doc nr	Revision	Date	Description	Author	Approved
PART01104	01-00	13-02-2017	Initial release	TFR	TVA
PART01104	01-01	01-08-2019	A4 to A5 format	TFR	TVA
PART01104	01-02	22-01-2020	Safety zone update	CSK	NVDE
PART01104	01-03	25-09-2020	Changed accessories	NvE	LL
PART01104	01-04	09-04-2021	Updated Warnings	NvE	LL
PART01104	01-05	10-10-2024	Changed weight	MBO	SvdS

1 MEET THE MAGICFX® STADIUMBLASTER!

The MAGICFX® STADIUMBLASTER is a special effects machine that launches confetti into the air up to a height of 12 metres.

The MAGICFX® STADIUMBLASTER is equipped with a CO_2 powered woofer. CO_2 is blown into the woofer through small holes. This creates a Venturi effect that draws the confetti continuously from the hopper, out of the woofer and into the air. The effect is accompanied by a strong hissing sound. If liquid CO_2 is applied, a white plume of smoke will be visible.

The MAGICFX® STADIUMBLASTER is outfitted for operation:

- by hand with the manual CO_2 valve;
- with a 24 V controller;
- with DMX and optionally RDM.

With DMX you can operate multiple machines in a sequence.

1.1 MAIN PARTS

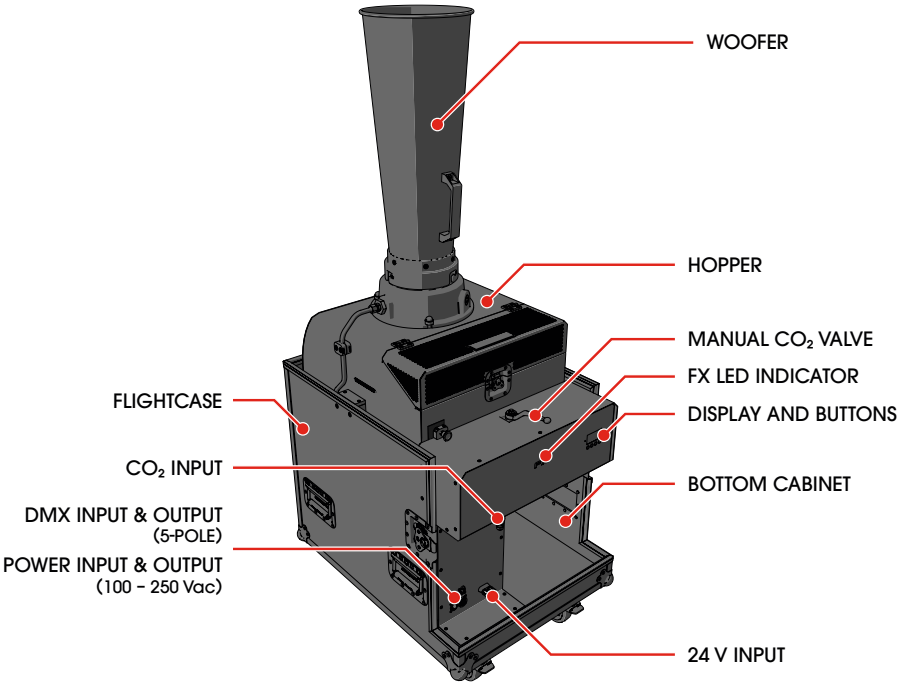

Main parts

1.2 TECHNICAL DATA

Product	Product Name	MAGICFX® STADIUMBLASTER	
	Product Code	MFX0803	
	Product Type	CONFETTI & STREAMER FX	
Main Dimensions	Length	800 mm	31.5 in
	Width	600 mm	23.6 in
	Height	1100 mm	43.3 in
Weight	Weight	79 kg	174.2 lb
Environment	Minimum Temperature	-20 °C	-4 °F
	Maximum Temperature	70 °C	158 °F
	Humidity (Relative)	20% to 90% (non condensing)	
	IEC 60529 (IP) Rating	IP13	
Electrical	Voltage Input (Vac)	100 – 250 Vac	
	Voltage Frequency	50 – 60 Hz	
	Power Consumption (Vac)	20 W	
	Power Connector (Vac)	Neutrik® powerCON TRUE1 (in & out)	
	Voltage Input (Vdc)	18 – 36 Vdc	
	Power Consumption (Vdc)	17 W	
	Power Connector (Vdc)	Banana Plug & Wire	
Controlling	Control Options	DMX / Manual valve / 24 Vdc	
	Control Protocols	DMX512-A (ANSI E1.11) RDM (ANSI E1.20)	
	Control Connectors	Neutrik® 5 pole male / female XLR	
Configuring	Configure Options	On Device & RDM	
Usage	Consumable(s)	MAGICFX® CONFETTI	
	Consumable Consumption	Depends on type of confetti, see Section 1.5	
	Propellant	Liquid or Gaseous CO_2	
	Propellant Connector	CO_2 Quick Connector 3/8”	
	Propellant Consumption	0.5 L/s	

Technical data

1.3 PRODUCT IDENTIFICATION

Type plate

1.4 ACCESSORIES

Code	Product	Included
MFX1114	CO_2 High Pressure Hose 3/8 Male - Female, 1.25 m	
MFX1105	CO_2 High Pressure Hose 3/8 Male - Female, 2 m	
MFX1106	CO_2 High Pressure Hose 3/8 Male - Female, 3 m	
MFX1108	CO_2 High Pressure Hose 3/8 Male - Female, 10 m	
MFX1109	CO_2 High Pressure Hose 3/8 Male - Female, 15 m	
MFX1110	CO_2 90 Degrees Connector 3/8	
MFX1103	CO_2 Bottle to Hose Connector	
MFX1115	CO_2 Bottle to Hose Connector 90 Degrees	
MFX0313	Schuko to Neutrik® powerCON TRUE1 - cable 1.5 m	
MFX0422	MAGICFX® STADIUMBLASTER Raincover	

Accessories

1.5 CONFETTI

The MAGICFX® STADIUMBLASTER can be set in 5 different angles between 45° and 90°. The output height and output distance depends on the type of confetti and the set angle. The maximum load per blast also depends on the type of confetti. Check the following table.

Type of confetti	Max. load per blast	Output height	Output distance
Metallic confetti	20 kg	12 m	25 m
Paper confetti	10 kg	12 m	25 m
Snow/Powder confetti	5 kg	12 m	25 m

Confetti types and related loads and output

NOTICE Wind and other weather circumstances will influence the output height and output distance of the confetti. The given values are estimated values.

1.6 DMX CONTROL

When connected to DMX the MAGICFX® STADIUMBLASTER is controlled with 1 safety address and 1 operational address:

DMX Address	Address range
Safety	1 – 512
Start	1 – 512

DMX addresses

The safety address cannot be the same as (one of) the operational address(es). Operating of these addresses results in the following:

DMX Address	DMX Value (decimal)		Result
Safety	0	99	Device disabled
	100	155	Device enabled
	156	255	Device disabled
Start (output)	0	199	Valve closed
	200	255	Valve open

Operation of the DMX addresses

When you link multiple machines with DMX, we advise you to use the same Safety address for all machines.

⚠ CAUTION Always plug in a DMX Terminator into the DMX output of the final unit in the control sequence. Using a DMX Terminator improves signal reliability.

1.7 DISPLAY PANEL

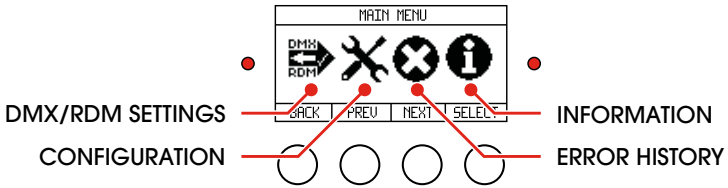

Display panel

The display panel is located on the backside of the MAGICFX® STADIUMBLASTER. Check the following menu structure for all options in the menu. Use the buttons for navigation and selection. The left-hand LED blinks red when DMX is active. The right-hand LED continuously lights red when an error is present.

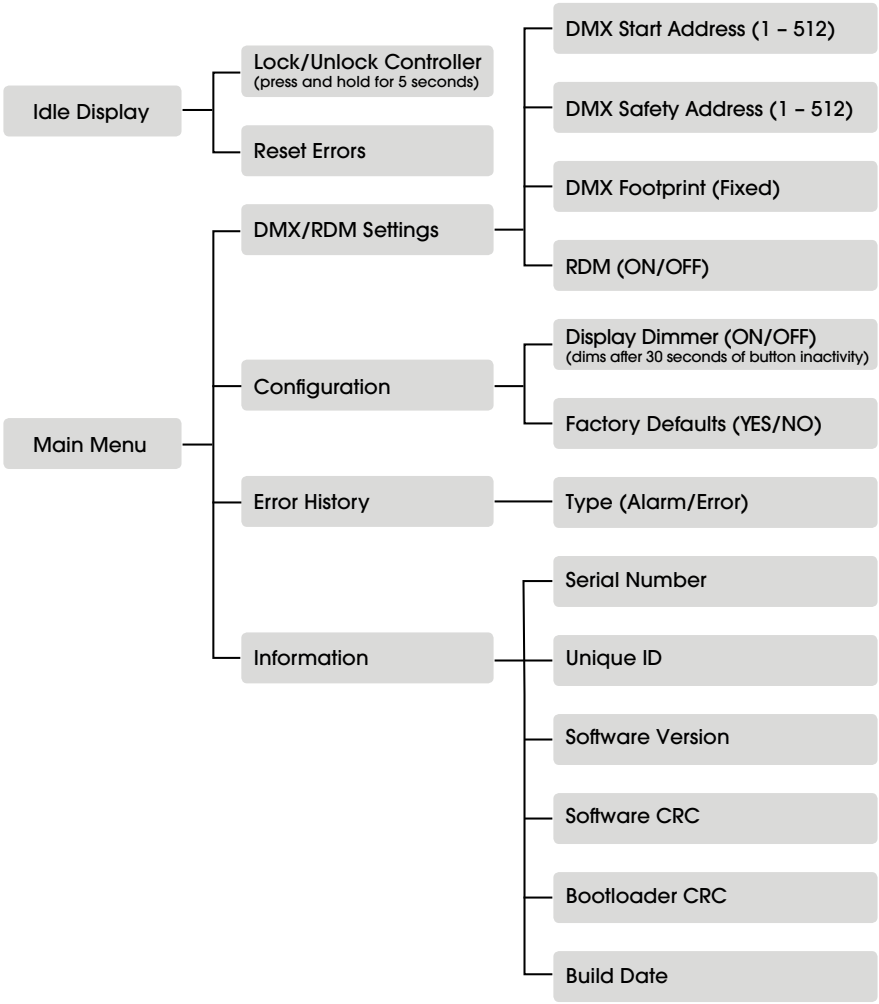

Menu structure

Menu function	Explanation
Lock/Unlock Controller	Holding the Lock button for more than 5 seconds will “lock” the display functions. Meaning buttons will not respond. This to avoid accidental change of parameters via display.To unlock, hold the Unlock button for more than 5 seconds.
Reset Errors	In case there is a locking error present, this button will reset the appliance. If the fault does not persist, the locking error will not reappear.
DMX Start Adress (1-512)	Setting the DMX start address.
DMX Safety Adress (1-512)	Setting the DMX safety address
DMX Footprint (Fixed)	This parameter indicates the DMX footprint, in other words the amount of sequential channels used by the appliance. this does not include the safety channel.
RDM (On/Off)	This function turns on/off the RDM functionality.
Display Dimmer (On/Off)	Turn display dimmer on or off. If turned on, the display is dimmed automatically 30 seconds after the last button push.
Display Flip (On/Off)	
Factory Defaults (Yes/ No)	Restores the appliance factory default settings.
Type (Alarm/ Error)	Toggle between the occured locking error (Alarm) list, and blocking error (Error) list. Locking errors need intervention by user, although they are “auto-reset” 3 times before the appliance remains in error until reset by user. Blocking errors clear when the triggering fault disappears. 16 locked, and 16 blocked errors are logged. Top of the list shows the last occurring error.
Serial Number (DDDDD)	Appliance serial number as also printed on the appliance label.
Unique ID (HHHHHHHHHHHH)	UID number as the appliance appears in the RDM device list after running discovery.
Software Version	Installed software version.
Software CRC	CRC of the functional software.
Bootloader CRC	CRC of the bootloader software.
Build Date	Release date of functional software.

1.8 RDM CAPABILITY

Remote Device Management Protocol (RDM) is an enhancement of the DMX512 communication protocol. RDM can be used for configuration and status monitoring while DMX512 takes care of the default controlling.

For RDM you will need a RDM compatible controller. The following RDM parameters are supported by the MAGICFX® STADIUMBLASTER.

Parameter ID	Discovery	GET	SET
DISC_UNIQUE_BRANCH	X		
DISC_MUTE	X		
DISC_UN_MUTE	X		
DEVICE_INFO		X	
SUPPORTED_PARAMETERS		X	
SOFTWARE_VERSION_LABEL		X	
DEVICE_MODEL_DESCRIPTION		X	
MANUFACTURER_LABEL		X	
SLOT_DESCRIPTION		X	
DMX_PERSONALITY_DESCRIPTION		X	
DMX_START_ADDRESS		X	X
IDENTIFY_DEVICE		X	X
DEVICE_LABEL		X	X
FACTORY_DEFAULTS		X	X
DMX_PERSONALITY		X	X
RESET_DEVICE			X

RDM parameters

RDM parameters are subject of change due to software updates. Contact MAGIC FX for the latest information and updates.

2 BLAST SAFELY!

The MAGICFX® STADIUMBLASTER has been designed and constructed in such a manner that it can be used safely. This applies to the use, the circumstances and the regulations as described in this documentation. Reading this documentation and following the instructions are therefore necessary for everyone who is authorised to work with the MAGICFX® STADIUMBLASTER.

The MAGICFX® STADIUMBLASTER must be used in surroundings that:

- Have a stable temperature of between -20 and 70 °C.
- Have a relative humidity degree between 20 % and 90 % (non condensing).
- Are free of dust, corrosive gases and high concentrations of organic vapours.
- Are not situated in the vicinity of a source of vibration.

2.1 GENERAL SAFETY RULES

- Only authorised persons may carry out work with the MAGICFX® STADIUMBLASTER.
- Do not use the MAGICFX® STADIUMBLASTER if there are people or animals in the direct output.
- Make sure that children, unauthorised people and animals do not obtain access to the MAGICFX® STADIUMBLASTER.
- Make sure there are no freestanding objects or objects that can be damaged by the MAGICFX® STADIUMBLASTER within the output distance.
- Do not connect more units to a single electrical circuit than the installed fuse is able to handle. (Calculate the summed load with the electrical data from Chapter 1)
- Do not remove any safeguards, safety caps and safety symbols.
- All required safety devices must be in good condition and function properly.
- Ensure sufficient lighting of the surroundings.
- Keep the workplace clean.

2.2 CO_2

The MAGICFX® STADIUMBLASTER uses liquid or gaseous CO_2 as input. The application of CO_2 involves serious risks. Make sure that you are well informed on these risks before installation and/or operation. Always use approved CO_2 cylinders, hoses and connections. Always consult your CO_2 supplier for regulations and instructions on safe installation and use.

MAGIC FX is not liable for unsafe situations, accidents and damage that are the result of incorrect working with CO_2 and CO_2 cylinders.

⚠ WARNING	Inadequate installation and/or operation of a CO_2 powered machine and CO_2 cylinders can lead to death or serious injury. Always follow the instructions from this manual, from your CO_2 supplier and from local authorities.

2.3 INDOOR USE

The MAGICFX® STADIUMBLASTER is designed for outdoor use and use in well-ventilated indoor spaces. When used indoors, make sure you take the necessary preparations. These preparations could include, but are not limited to:

- Consulting your CO_2 supplier.
- Calculating the reduction of oxygen for the indoor space.
- Checking the location for spots where CO_2 could accumulate and taking preventive actions.
- Installing CO_2 monitoring devices that will warn for hazardous CO_2 levels.

⚠ DANGER Do not use the MAGICFX® STADIUMBLASTER in poorly ventilated confined spaces. Exposure to high levels of CO_2 gas can cause symptoms like headache, nausea, loss of consciousness or even death.

2.4 RIGGING

Please follow the European and national guidelines for safe rigging and trussing.

2.5 NOISE LEVEL

The environmental noise level as measured at the ear is 97 dB(A). This level of noise is only reached during the short instances that the CO_2 output is active. Always wear hearing protection when you are within 5 meters of the machine during operation.

⚠ WARNING Do not operate the MAGICFX® STADIUMBLASTER close to yourself or to others for a long period of time. If you experience any hearing loss or ringing in the ears, you should immediately stop using the unit.

2.6 SAFETY SYMBOLS

Symbol	Meaning	Position
	Read the manual carefully before use!	Back of the machine
	Wear certified ear protection!	
	Frostbite hazard! Cold surface. Do not touch the venturi nozzle.	

Safety symbols

2.7 PRECAUTIONS FOR OPERATION

⚠ WARNING Using a damaged or an improper installed machine can lead to death, serious injury or property damage. Always inspect the machine thoroughly before operation.

⚠ CAUTION A missing or loose-fitted woofer can lead to injury. Make sure that the woofer is correctly in place on the bayonet connection and secured with the safety steel.

⚠ WARNING Make sure there are no objects near the output that can be damaged or overthrown by the MAGICFX® STADIUMBLASTER.

⚠ DANGER Always keep the output zone as shown in the image below clear of all people, animals and objects. Not doing so results in death or serious injury.

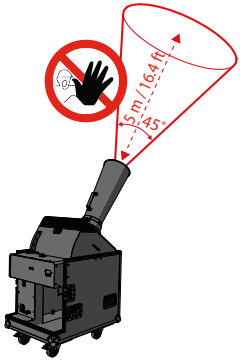

⚠ WARNING Always create a safety zone around the machine with a radius of 2 meters / 6.6 feet. Make sure unauthorized personnel, animals and objects are clear of this area. Not doing so can result in death or serious injury.

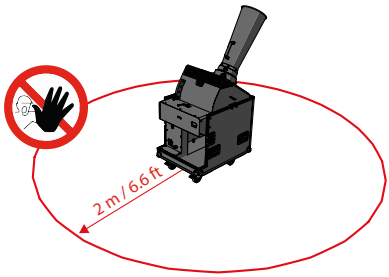

3 LET'S BLAST!

3.1 INSTALL THE MACHINE

1 Bring the cased MAGICFX® STADIUMBLASTER to the desired location.

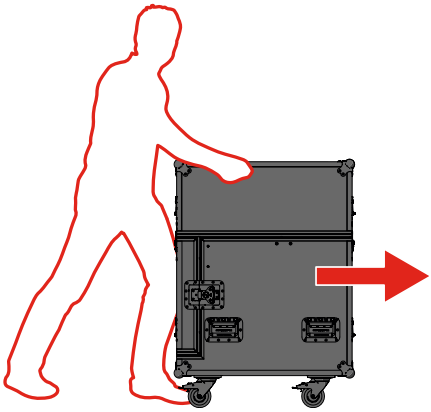

2 Unlock and remove the top cover.

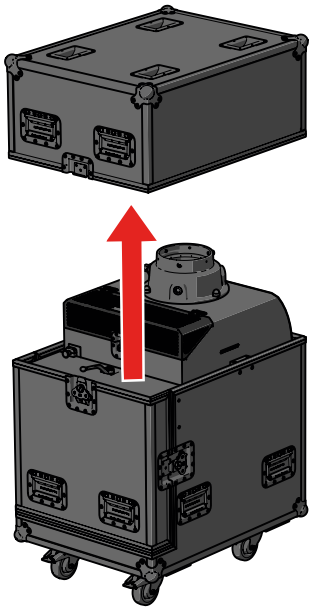

3 Unlock and remove the cover from the bottom cabinet.

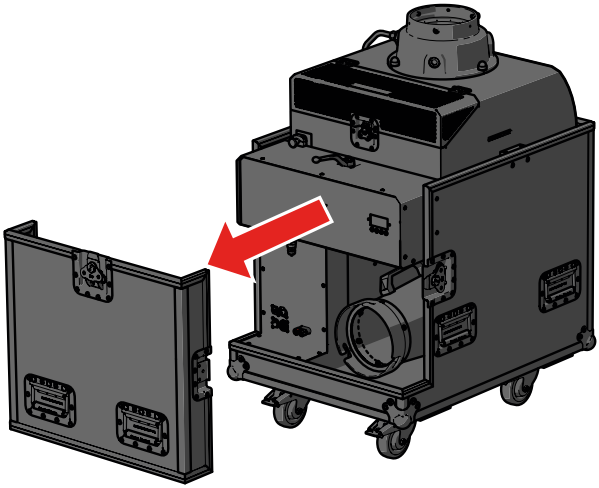

4 Take out the woofer.

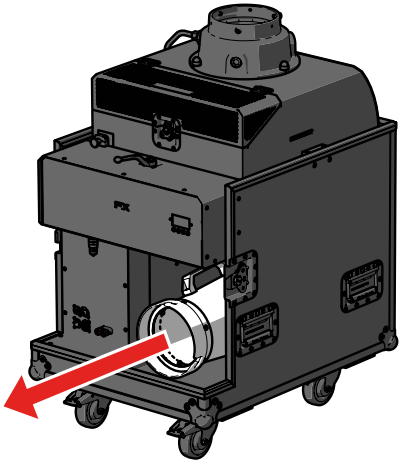

5 Screw the woofer firmly onto the bayonet socket of the hopper until it locks in place.

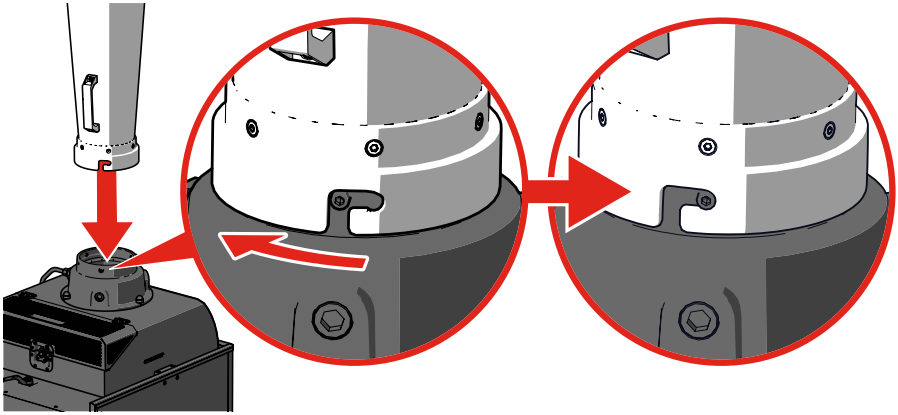

6 Secure the woofer with the safety steel.

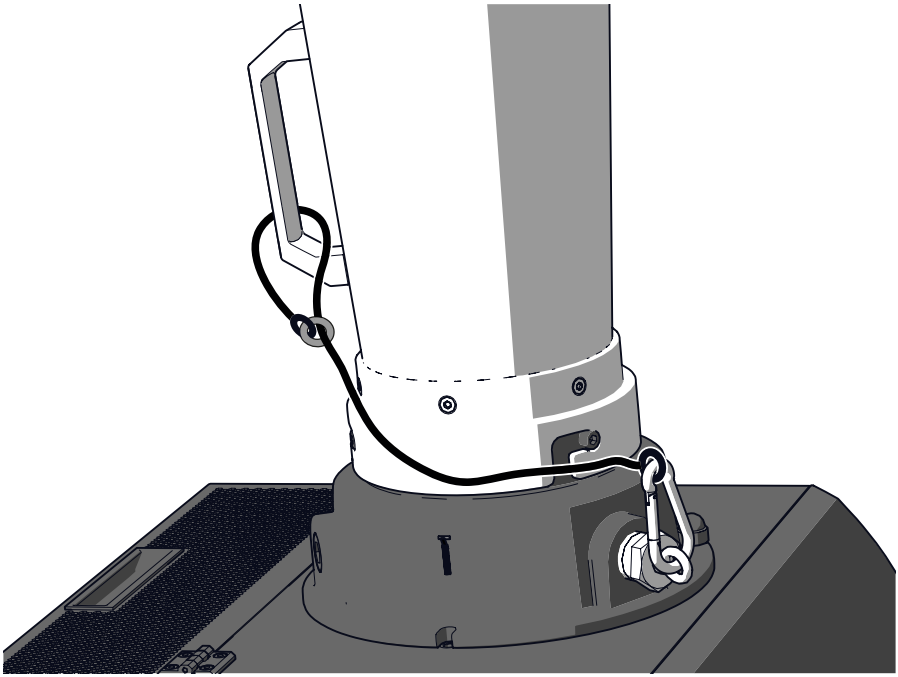

7 Optionally you can set the hopper with the attached woofer in one of the 5 pre-set angles.

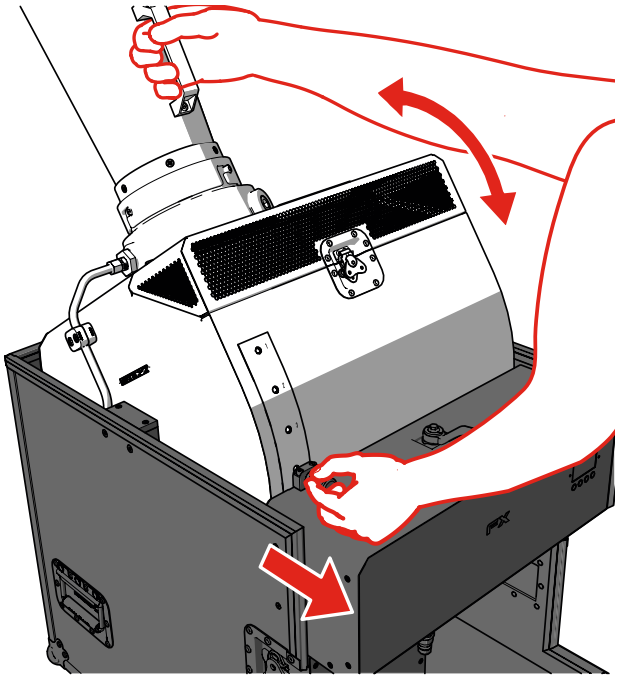

8 Place the MAGICFX® STADIUMBLASTER in its final position and set the brakes.

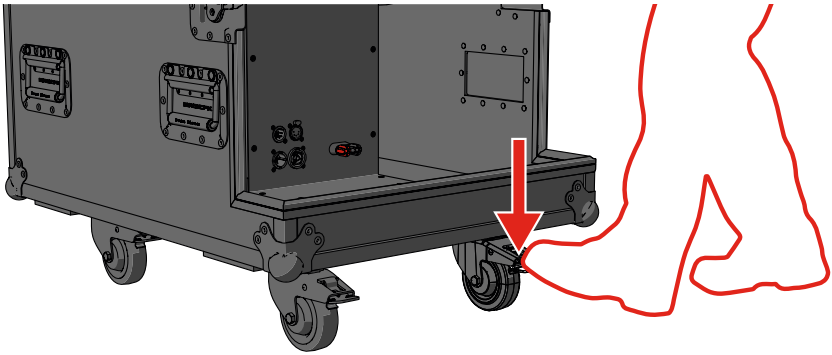

9 Take the necessary safety precautions, see Section 2.7.

10 Make sure the manual CO_2 valve is in CLOSED position.

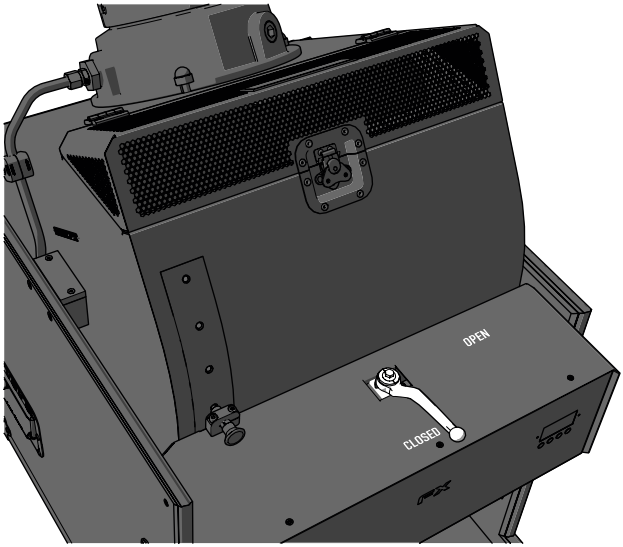

11 Connect the CO_2 hose to the CO_2 quick connector.

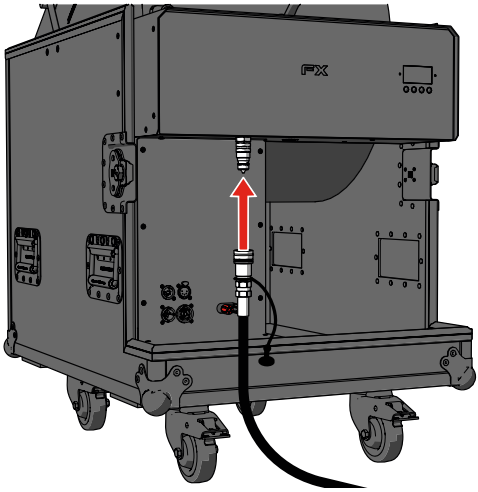

12 Connect a CO_2 Bottle to Hose Connector to a CO_2 cylinder.

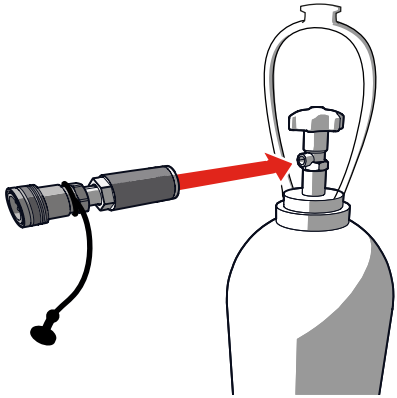

13 Connect the CO_2 hose to the CO_2 Bottle to Hose Connector on the CO_2 cylinder.

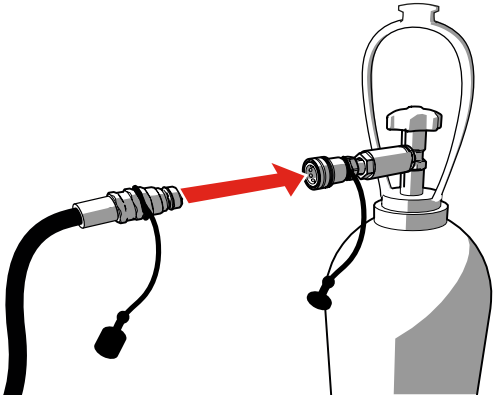

14 Open the CO_2 cylinder.

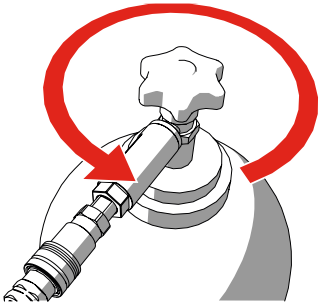

15 In case of multiple machines: Repeat steps 1 – 14 for each machine.

3.2 FILL WITH CONFETTI BEFORE EACH BLAST

1 Unlock and open the lid of the hopper.

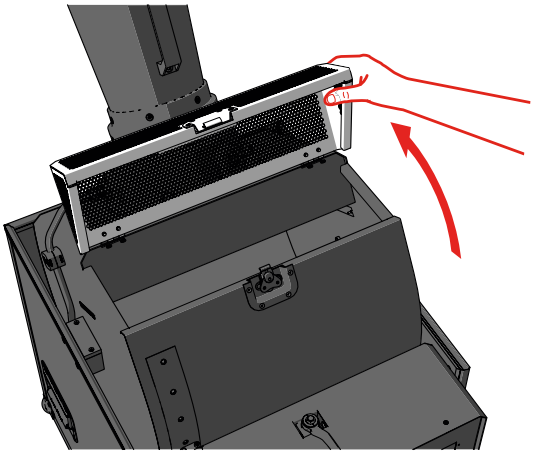

2 Fill the hopper with confetti. Check Section 1.5 for the maximum amount per type of confetti.

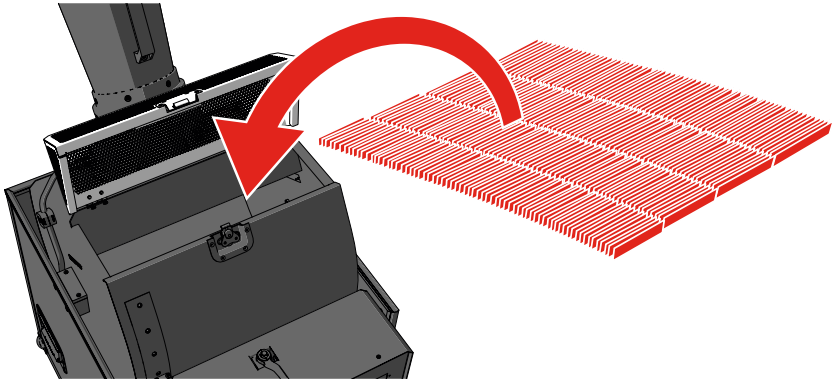

3 Close and lock the lid of the hopper.

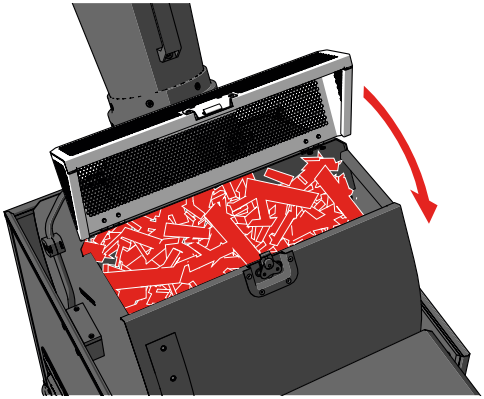

4 In case of multiple machines: Repeat steps 1 – 3 for each machine.

3.3 BLAST MANUALLY

1 Make sure that the safety zone is free from persons and hazardous objects.

2 When it's time to blast, move the manual CO_2 valve in OPEN position.

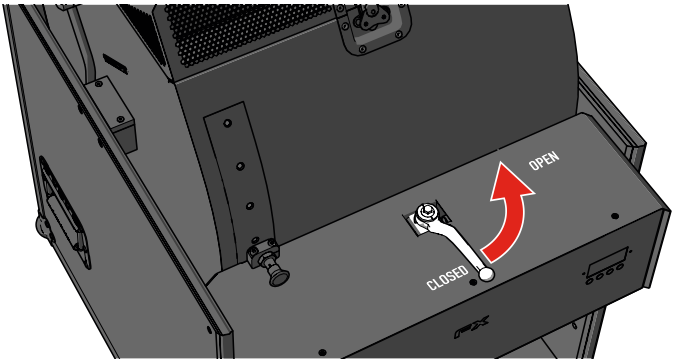

NOTICE The best effect results are achieved when you open the lid just before you start blasting. Make sure that no foreign objects will enter the hopper and close the lid again after the effect.

3 Enjoy the view!

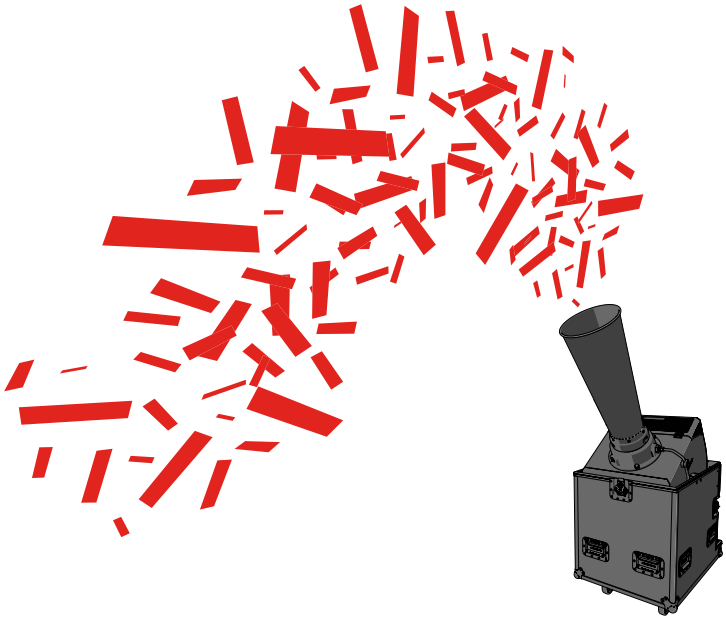

4 When the hopper is out of confetti, move the manual CO_2 valve back in CLOSED position.

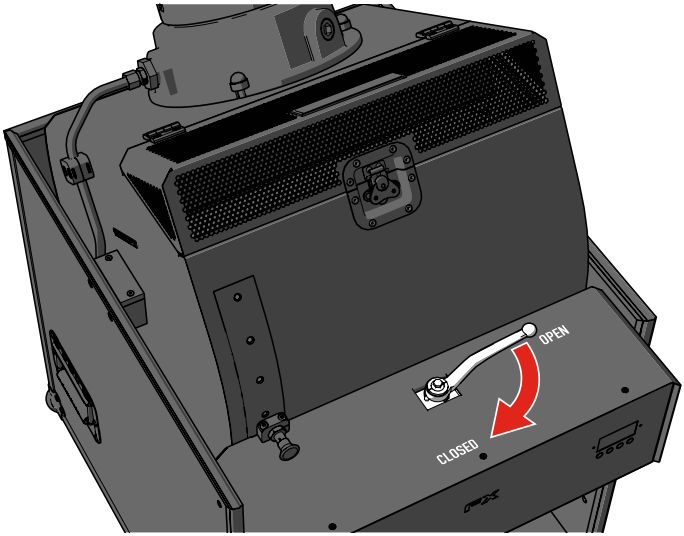

3.4 CONNECT 24 V CONTROL

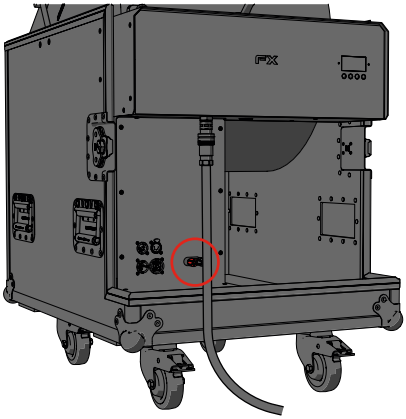

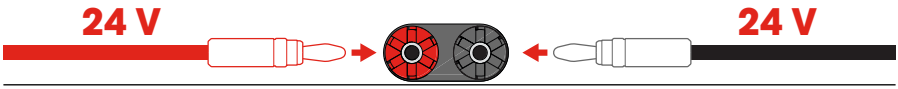

1. Connect two cables to the 24 V input.
2. Connect the other ends of the cables to your controller.

NOTICE No additional power source is needed. The controller provides power to the MAGICFX® STADIUMBLASTER to open and close the output valve.

NOTICE The FX LED indicator and the display and buttons are inactive when control is applied. The controller only powers the output valve.

3.5 BLAST WITH 24 V CONTROL

1. Make sure that the safety zone is free from persons and hazardous objects.
2. When it's time to blast, continuously, enable the output on your 24 V controller and make sure to produce a continuous pulse.

NOTICE The best effect results are achieved when you open the lid just before you start blasting. Make sure that no foreign objects will enter the hopper and close the lid again after the effect.

3. Enjoy the view!
4. When the hopper is out of confetti, disable the output on your 24 V controller.

3.6 CONNECT POWER AND SETUP DMX

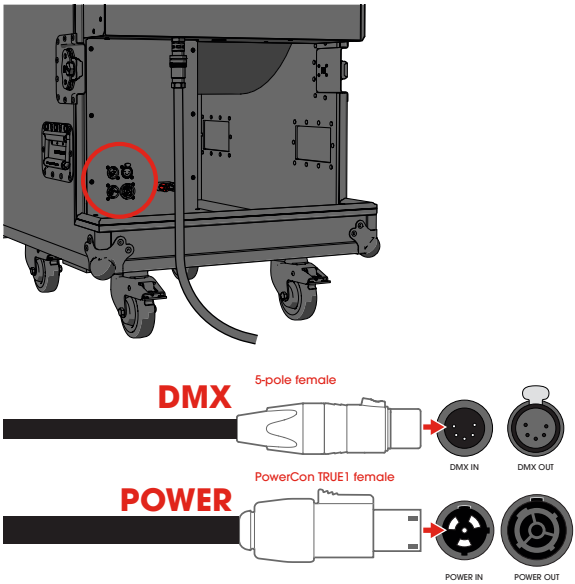

1. Connect a power cable with a Powercon TRUE1 Female connector to the power input.
2. Connect the other end of the power cable to a 100 – 250 Vac (50 – 60 Hz) power source.
3. Connect the female connector of a 5-pole DMX cable in the DMX input.
4. Connect the other end of the DMX cable to your DMX controller.
5. Use the display and buttons or a RDM controller to assign DMX addresses, see chapter 1.

⚠ CAUTION Always plug in a DMX Terminator into the DMX output. Using a DMX Terminator improves signal reliability.

3.7 SETUP MULTIPLE MACHINES IN A SEQUENCE WITH DMX

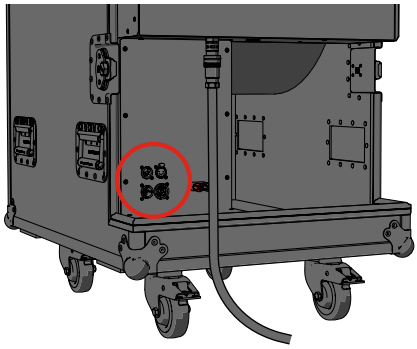

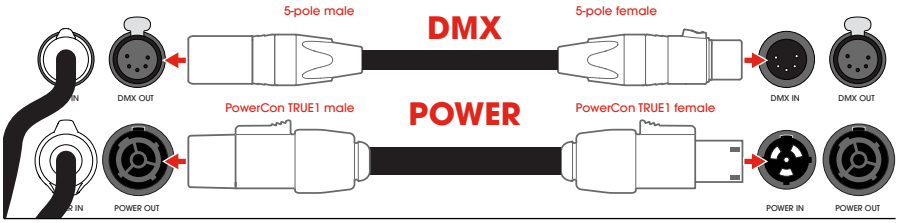

1. Connect a power link cable to the power output.
2. Connect the other end to the power input of the next machine.
3. Connect a DMX cable to the DMX output.
4. Connect the other end to the DMX input of the next machine.
5. Use the buttons or a RDM controller to assign DMX addresses, see chapter 1.
6. Repeat step 1 to 5 for each subsequent machine.

⚠ CAUTION Always plug in a DMX Terminator into the DMX output of the final unit in the control sequence. Using a DMX Terminator improves signal reliability.

3.8 BLAST WITH DMX

1. Make sure that each safety zone is free from persons and hazardous objects.
2. Activate the Safety address. The FX LED indicator on each machine lights up.
3. When it's time to blast, activate the Start address.

NOTICE The best effect results are achieved when you open the lid just before you start blasting. Make sure that no foreign objects will enter the hopper and close the lid again after the effect.

4. Enjoy the view!
5. Deactivate the Start address when the hopper is out of confetti.

3.9 REPLACE A CO_2 CYLINDER

1 Make sure that:

a) The manual CO_2 valve is in CLOSED position.

b) The DMX Safety address is not activated (FX LED indicator is dimmed).

c) The 24 V controller (if used) is not powered.

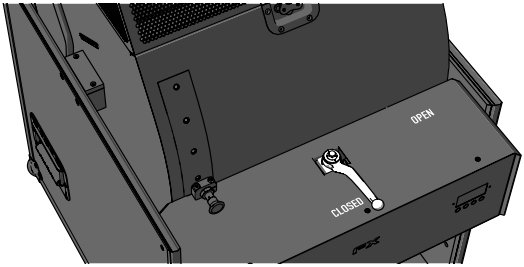

2 Close the CO_2 cylinder.

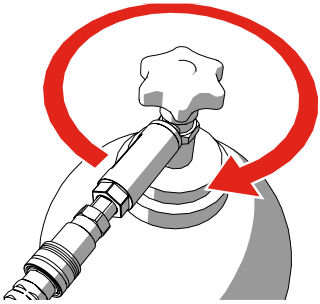

3 Move the manual CO_2 valve in OPEN position to release the pressure from the system.

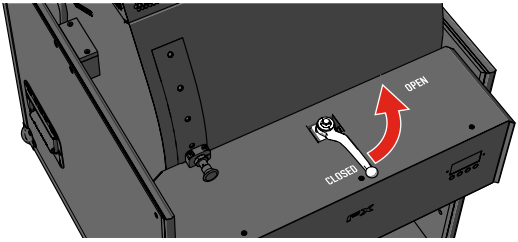

4 Move the manual CO_2 valve back in CLOSED position.

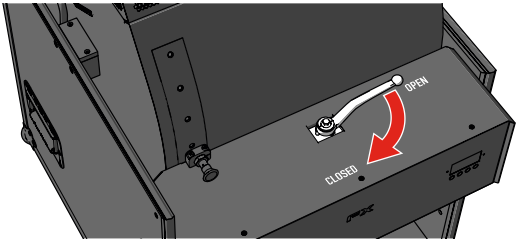

5 Disconnect the CO_2 hose from the CO_2 Bottle to Hose Connector on the CO_2 cylinder.

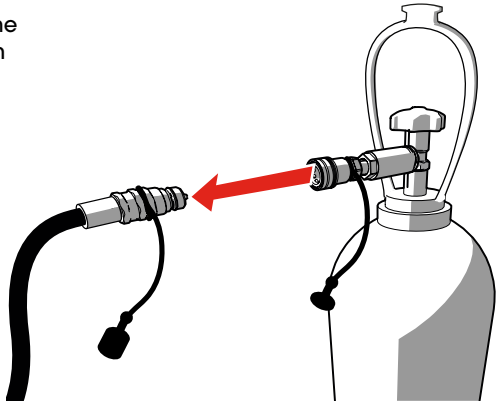

6 Remove the CO_2 Bottle to Hose Connector from the cylinder.

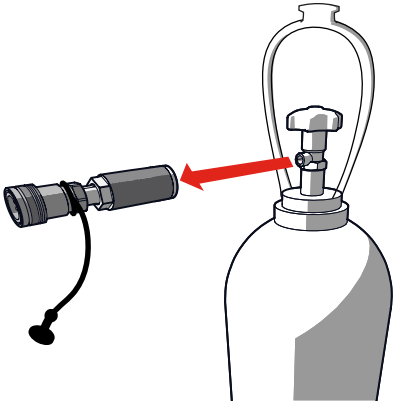

7 Connect a CO_2 Bottle to Hose Connector to a new CO_2 cylinder.

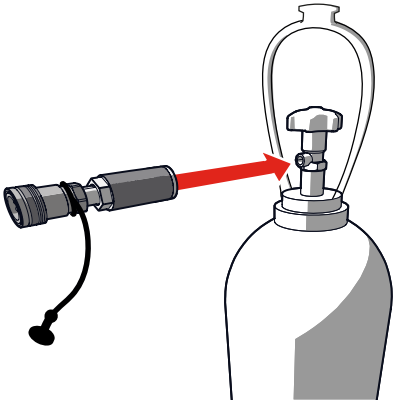

8 Connect the CO_2 hose to the CO_2 Bottle to Hose Connector on the new CO_2 cylinder.

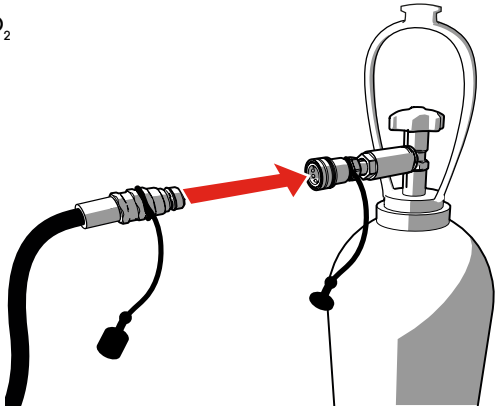

9 Open the CO_2 cylinder.

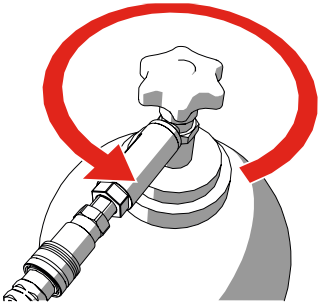

10 In case of multiple machines: Repeat steps 1 – 9 for each machine.

3.10 CLEAN UP

1 Deactivate the Safety address (FX LED indicator on each machine dims).

2 Disconnect any 24 V, DMX and power cable(s).

3 Close the CO_2 cylinder.

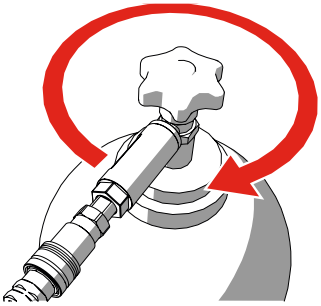

4 Move the manual CO_2 valve in OPEN position to release the pressure from the system.

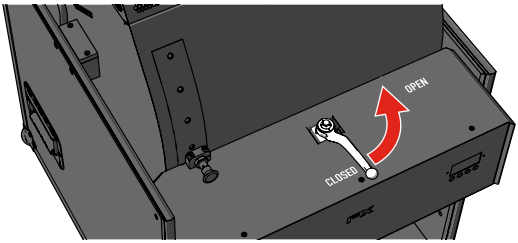

5 Disconnect the CO_2 hose from the CO_2 quick connector.

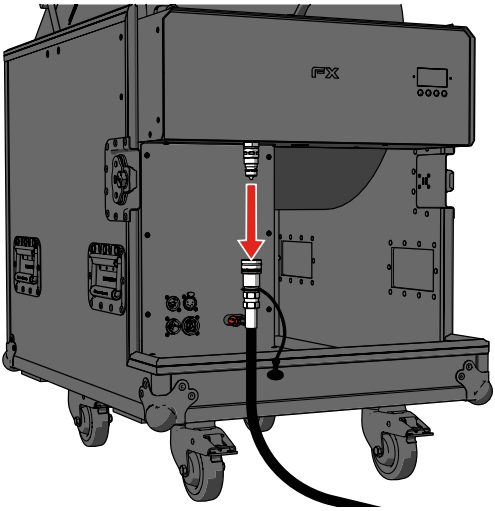

6 Disconnect the CO_2 hose from the CO_2 Bottle to Hose Connector on the CO_2 cylinder.

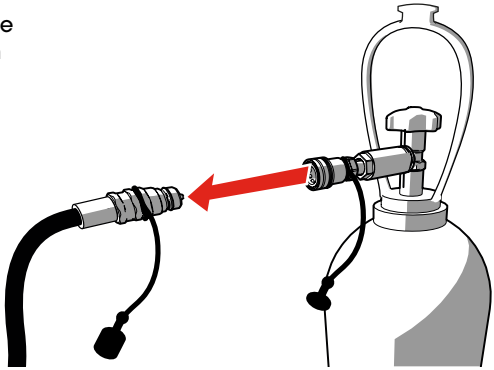

7 Remove the CO_2 Bottle to Hose Connector from the cylinder.

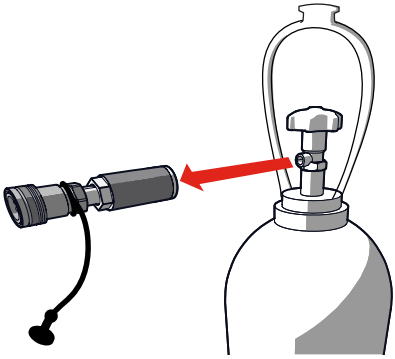

8 Wait until the ice crust on the output has melted.

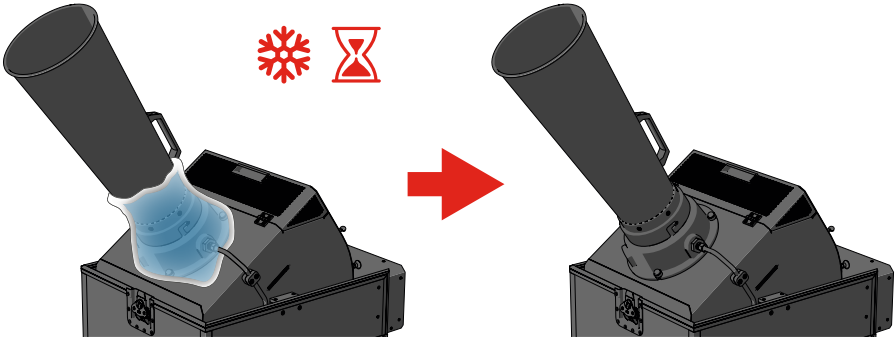

9 In case you have set the hopper under an angle: Position the hopper back in horizontal position (position 1).

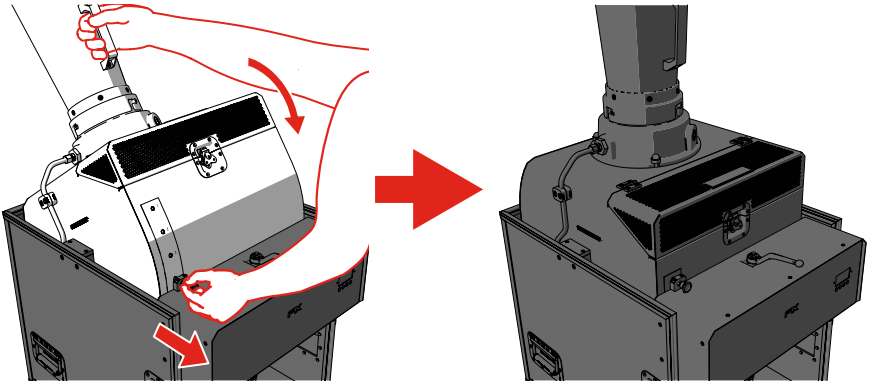

10 Remove the safety steel.

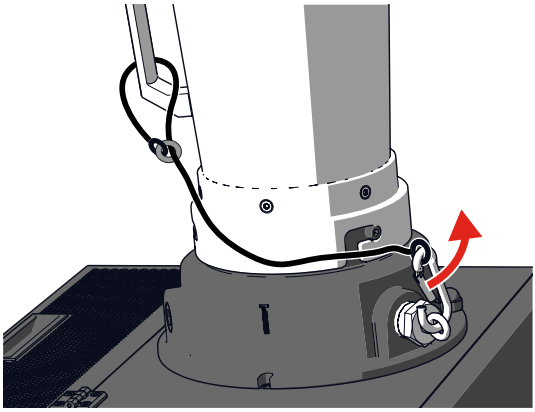

11 Remove the woofer.

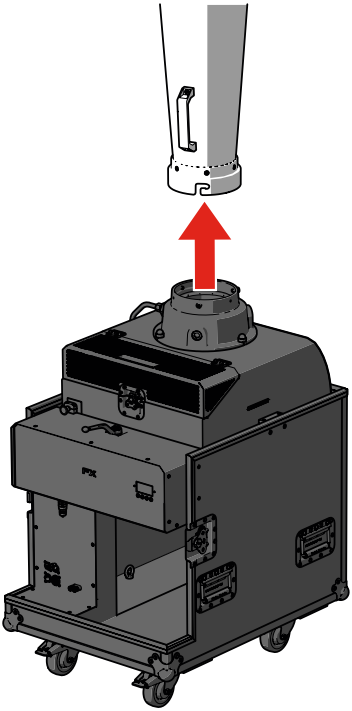

12 Remove the woofer.

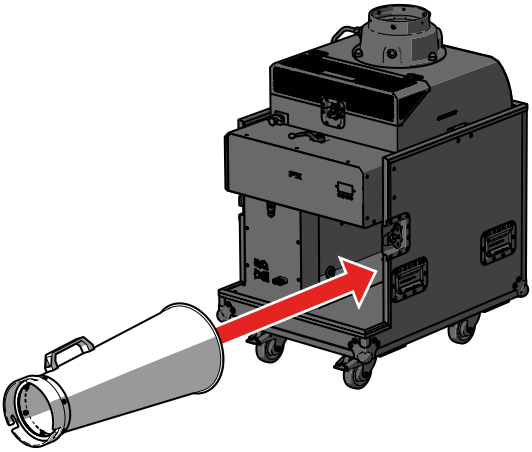

13 Place and lock the cover of the bottom cabinet.

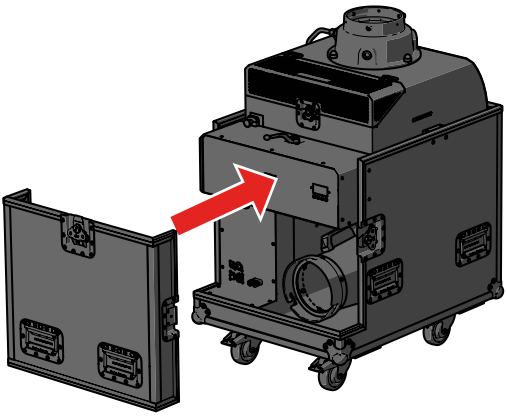

14 Unlock and open the lid from the hopper.

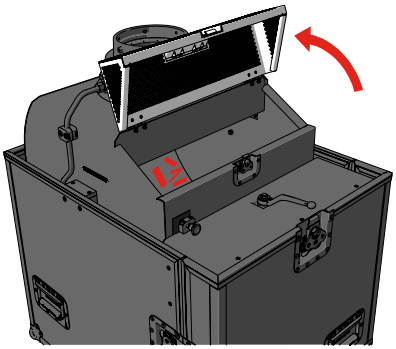

15 Remove remaining confetti from the hopper.

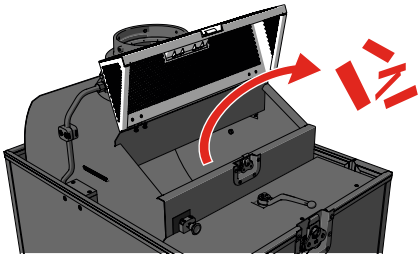

16 Close and lock the lid from the hopper.

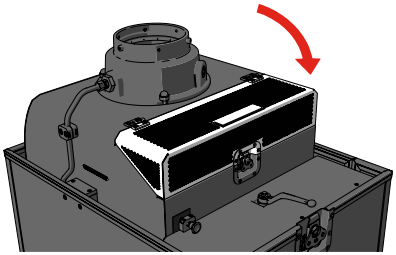

17 Place and lock the top cover.

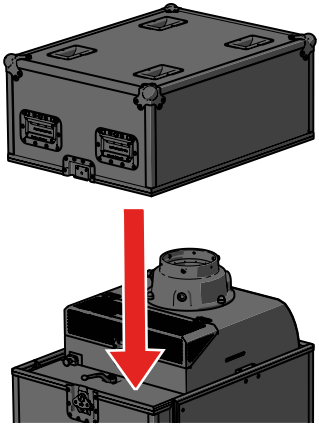

18 Release the brakes.

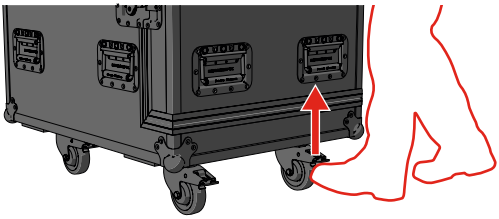

4 MAINTENANCE

To achieve the maximum service life of the MAGICFX® STADIUMBLASTER you must regularly clean the MAGICFX® STADIUMBLASTER and test if it is functioning correctly.

Contact MAGIC FX if the MAGICFX® STADIUMBLASTER is not functioning correctly.

⚠ DANGER Do not replace parts yourself; always consult MAGIC FX.

5 TROUBLESHOOTING

Always contact MAGIC FX if any malfunctions or errors occur that cannot be solved with the instructions as described in this manual.

6 CORRECT DISPOSAL

This symbol on the product and / or accompanying documents means that used electrical and electronic products should not be mixed with general household waste. For proper treatment, recovery and recycling, please take this product to designated collection points where it will be accepted free of charge.

Alternatively, in some countries you may be able to return your products to your local retailer upon purchase of an equivalent new product.

Disposing of this product correctly will help save valuable resources and prevent any potential negative effects on human health and the environment, which could otherwise arise from inappropriate waste handling.

Please contact your local authority for further details of your nearest designated collection point.

Penalties may be applicable for incorrect disposal of this waste, in accordance with your national legislation.

7 EC DECLARATION OF CONFORMITY

According to Annex III A Low Voltage Directive 2014/35/EU + Machinery Directive 2006/42/EC

MAGIC FX B.V. declares as manufacturer and composer of the technical construction file that the product with the following specifications:

Name machine	: STADIUMBLASTER
Type	: MFX0803
Voltage	: 100-250Vac 50-60Hz
Serial number	: on product
Year of construction	: on product

Is in conformity with the minimal safety regulations as stated in the following directive(s):

- EMC (2014/30/EC) ElectroMagnetic Compatibility
- RoHS (2011/65/EU) Restriction of the use of certain Hazardous Substances
- WEEE (2012/19/EU) Waste Electrical & Electronic Equipment

The following harmonized standards were applied:

- NEN-EN-ISO 12100:2010 Safety of machinery - General principles for design - Risk assessment and risk reduction.
- NEN-EN-IEC 60204-1:2006, Safety of machinery - Electrical equipment of machines - Part 1: General requirements.
- NEN-EN-IEC 61000-6-3:2007/A1:2011, Electromagnetic compatibility (EMC) - Part 6-3: Generic standards - Emission standard for residential, commercial and light-industrial environments.

☐ Original declaration of conformity
☑ Translation of the original declaration of conformity

Name manufacturer	: MAGIC FX BV
Address	: Schouwrooij 27, 5281 RE BOXTEL
Country	: The Netherlands
CEO	: B. Veroude
Date	: 17-01-2017
Signature	:

MAGICFX®

WWW.MAGICFX.EU