USER AND INSTALLATION MANUAL

ENGLISH

MAGICFX®

/POWERSHOT II.

CE

CONFETTI & STREAMER FX

PART01185

rev 01-01

DISCLAIMER

⚠ WARNING	Read this manual carefully before installing and/or using this product. Failure to read the manual and to follow the printed instructions may lead to personal injury and/or damage to the product.

© 2018 MAGICFX®
All rights reserved.

Nothing from this publication may be copied, reproduced and/or published by means of printing, photocopying or by any other means, without the prior written approval of MAGIC FX.

MAGIC FX reserves the right to modify specifications stated in this manual.

TRADEMARKS

Any brand names mentioned in this manual are registered trademarks of their respective owners.

LIABILITY

MAGIC FX accepts no liability for claims from third parties arising from unauthorised use, use other than that stated in this manual, and use other than in accordance with the General Conditions registered at the Chamber of Commerce.

Refer further to the General Conditions. These are available on request, free of charge.

Although considerable care has been taken to ensure a correct and suitably comprehensive description of all relevant components, the manual may nonetheless contain errors and inaccuracies.

Should you detect any errors or inaccuracies in the manual, we would be grateful if you would inform us. This helps us to further improve our documentation.

TABLE OF CONTENTS

Disclaimer		2
Trademarks		2
Liability		2
Foreword		4
Language		4
Revision table		4
1	**Meet the MAGICFX® POWERSHOT II!**	**5**
1.1	**Main parts**	**5**
1.2	**Electric cannons**	**5**
1.3	**Technical data**	**6**
1.4	**Product identification**	**7**
1.5	**Accessories**	**7**
2	**Shoot safely!**	**8**
2.1	**General safety rules**	**8**
2.2	**Noise level**	**8**
2.3	**Rigging**	**9**
2.4	**Safety symbols**	**9**
2.5	**Precautions for operation**	**9**
3	**Let's shoot!**	**10**
3.1	**Mount on a stage**	**10**
3.2	**Mount on a truss**	**11**
3.3	**Connect power**	**13**
3.4	**Place electric cannon**	**14**
3.6	**Let's shoot!**	**16**
3.7	**Clean up**	**17**
4	**Maintenance**	**18**
5	**Troubleshooting**	**18**
6	**Correct disposal**	**19**
7	**EC Declaration of Conformity**	**20**

FOREWORD

Congratulations! You have bought a great new product from MAGIC FX.

This manual contains all information required for the intended use of the equipment. Deviation from the described intended use can result in a hazardous situation and/or property damage.

This manual includes notes and warnings on safe operation of the equipment. These notes and warnings are accompanied by the following icons. Read them attentively!

⚠ DANGER	Indicates a hazardous situation that, if not avoided, will result in death or serious injury. This signal word is to be limited to the most extreme situations.
⚠ WARNING	Indicates a hazardous situation that, if not avoided, could result in death or serious injury.
⚠ CAUTION	Indicates a hazardous situation that, if not avoided, could result in minor or moderate injury.
NOTICE	Indicates information considered important, but not hazard-related (e.g. messages relating to property damage).

LANGUAGE

This document contains the original instructions in English. In case you require other languages please contact MAGIC FX.

REVISION TABLE

Document nr	Revision	Date	Description	Authored by	Checked by
PART01185	01-00	1-6-2018	Initial release	SdO	TvA
PART01185	01-01	24-9-2020	Accessories	NvE	LL

1 MEET THE MAGICFX® POWERSHOT II!

The MAGICFX® POWERSHOT II is a special effects machine for safe shooting of MAGICFX® electric cannons.

Before operation an electric cannon needs to be loaded into the pipe of the MAGICFX® POWERSHOT II. Two leaf springs hold the cannon in place. The pipe can be set in an angle. The MAGICFX® POWERSHOT II is equipped with a connector for the power cable of the cannon. When the user powers the MAGICFX® POWERSHOT II, a current is provided to the cannon. This releases the pressurized nitrogen in the bottom part of the cannon, shooting the load into the air.

The MAGICFX® POWERSHOT II is equipped with several holes for mounting of the unit to a stage or to a truss with a truss clamp and for attaching safety cables. Furthermore the MAGICFX® POWERSHOT II is suited for simultaneous ignition of multiple units by creating a power link.

1.1 MAIN PARTS

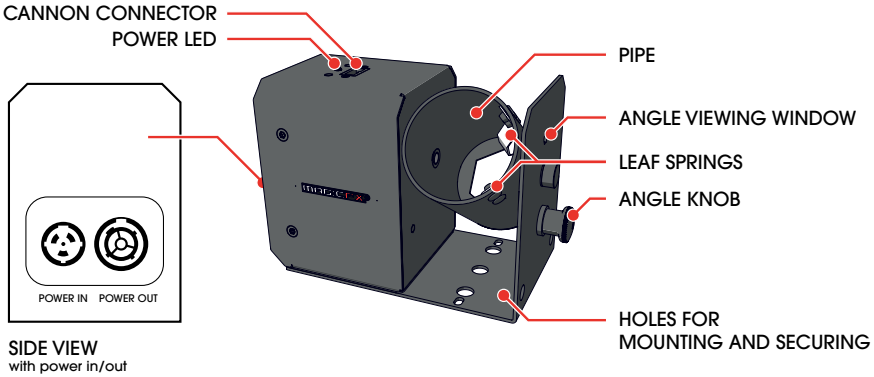

Main parts

1.2 ELECTRIC CANNONS

All Electric Cannons from MAGIC FX are compatible with the MAGICFX® POWERSHOT II. Check the website of MAGIC FX or contact your local dealer for ordering information.

1.3 TECHNICAL DATA

Product	Product Name	MAGICFX® POWERSHOT II	
	Product Code	MFX0304	
	Product Type	CONFETTI & STREAMER FX	
Main Dimensions	Length (mm/in.)	190	7,5
	Width (mm/in.)	90	3,5
	Height (mm/in.)	126,5	5
Weight	Empty weight (kg/lb.)	1,7	3,7
Package	Length (mm/in.)	241	9,5
	Width (mm/in.)	201	7,9
	Height (mm/in.)	146	5,7
	Packaged weight (kg/lb.)	1,9	4,2
Environment	Minimum Temperature (°C/°F)	-20	-4
	Maximum Temperature (°C/°F)	65	149
	Humidity (Relative)	20% to 90% (non condensing)	
Electrical	Voltage Input (Vac)	220 - 240Vac	
	Voltage Frequency	50 - 60Hz	
	Power Consumption (Vac)	120 W	
	Power Connector (Vac)	Neutrik® powerCON TRUE1 (in&out)	
Controlling	Control Options	Direct input	
Usage	Consumable(s)	MAGICFX® Electric Cannons	

Technical data

1.4 PRODUCT IDENTIFICATION

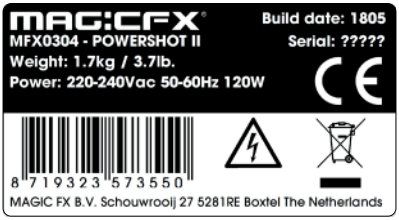

Type plate

1.5 ACCESSORIES

Code	Product	Included
MFX0313	SCHUKO TO NEUTRIK® POWERCON TRUE1 - CABLE 1.5 m	
MFX3103	Twenty Clamp (20 kg) M10	
MFX0305	MAGICFX® BASEPLATE II	
SPR00119	Safety Steel	
MFX0302	Cannon Clamp	

Accessories

Please contact MAGIC FX for additional possibilities.

2 SHOOT SAFELY!

The MAGICFX® POWERSHOT II has been designed and constructed in such a manner that it can be used safely. This applies to the use, the circumstances and the regulations as described in this documentation. Reading this documentation and following the instructions are therefore necessary for everyone who is authorised to work with the MAGICFX® POWERSHOT II.

The MAGICFX® POWERSHOT II must be used in surroundings that preferably:

- Have a reasonably stable temperature of between -20 and 65°C.
- Have a relative humidity degree of no more than 90% (non condensing).
- Are reasonably free of dust, corrosive gases and high concentrations of organic vapours.
- Are not situated in the vicinity of a source of vibration.

2.1 GENERAL SAFETY RULES

- Only authorised persons may carry out work with the MAGICFX® POWERSHOT II.
- Always follow the instructions from the user manual of the electric cannon when handling and working with electric cannons.
- Do not use the MAGICFX® POWERSHOT II if there are people or animals in the direct output.
- Make sure that children, unauthorised people and animals do not obtain access to the MAGICFX® POWERSHOT II.
- Make sure there are no freestanding objects or objects that can be damaged by the MAGICFX® POWERSHOT II within the output distance.
- Do not connect more units to a single electrical circuit than the installed fuse is able to handle. (Calculate the summed load with the electrical data from Chapter 1)
- Do not remove any safeguards, safety caps and safety symbols.
- All required safety devices must be in good condition and function properly.
- Ensure sufficient lighting of the surroundings.
- Keep the workplace clean.

2.2 NOISE LEVEL

The maximum environmental noise level measured at 20 cm (7,87 in) from the product is 91,6 dB(A). This level of noise is only reached during the short shooting instances. Therefore hearing protection is not necessary.

⚠ WARNING	Do not operate the MAGICFX® POWERSHOT II close to yourself or to others for a long period of time. If you experience any hearing loss or ringing in the ears, you should immediately stop using the unit.

2.3 RIGGING

Please follow the European and national guidelines for safe rigging and trussing.

2.4 SAFETY SYMBOLS

Symbol	Meaning
	Read the manual carefully before use!

Safety symbols

2.5 PRECAUTIONS FOR OPERATION

⚠ WARNING	Using a damaged or an improper installed machine can lead to death, serious injury or property damage. Always inspect the machine thoroughly before operation.
⚠ WARNING	Using a damaged, used or an improper installed electric cannon can lead to serious injury and property damage. Always inspect the cannon thoroughly before operation.
⚠ WARNING	Missing or obscured safety symbols on the machine can lead to death or serious injury. Make sure all safety symbols are correctly in place, see section 2.4.

3 LET'S SHOOT!

3.1 MOUNT ON A STAGE

1 Mount the MAGICFX® POWERSHOT II firmly on a stage.

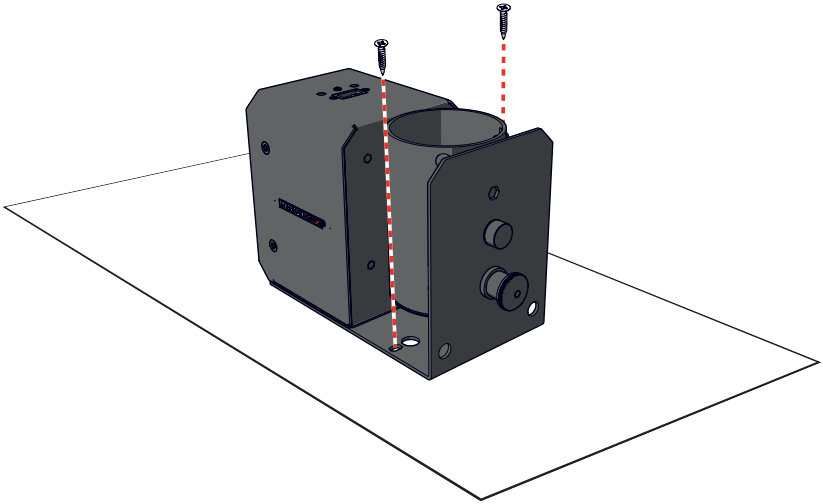

NOTICE Optionally use a MAGICFX® BASEPLATE II for stage mounting.

2 Inspect if the MAGICFX® POWERSHOT II is mounted firmly.

3.2 MOUNT ON A TRUSS

1 Flip the MAGICFX®
POWERSHOT II upside down.

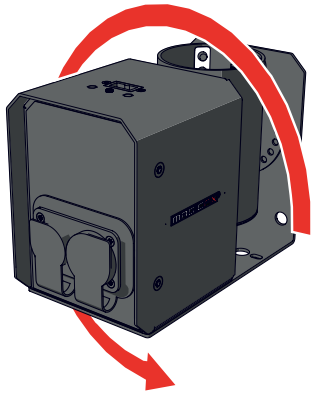

2 Screw a M10 twenty clamp for truss mounting (product code MFX3103) into the threaded hole.

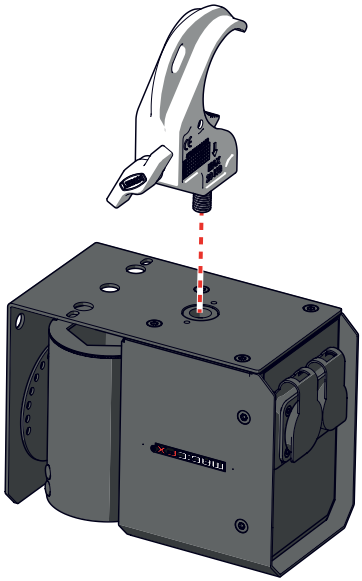

3 Mount the clamp firmly on a truss.

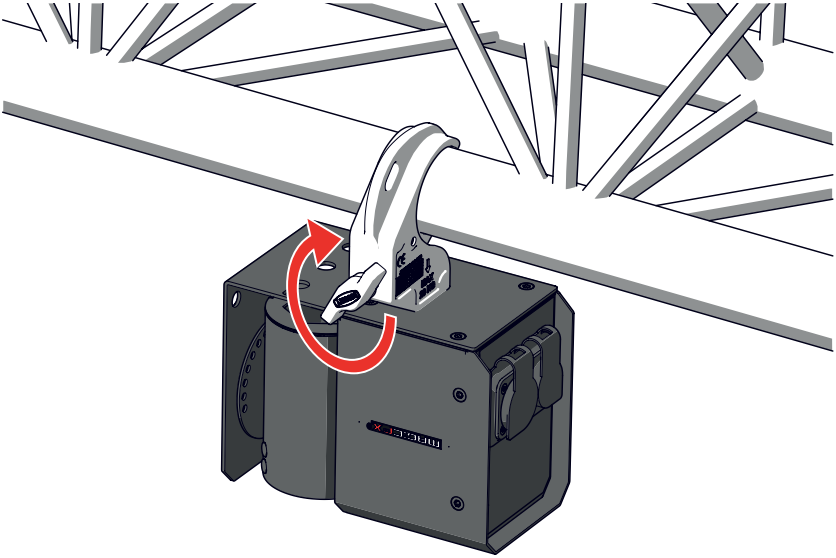

4 Secure the MAGICFX® POWERSHOT II onto the truss.

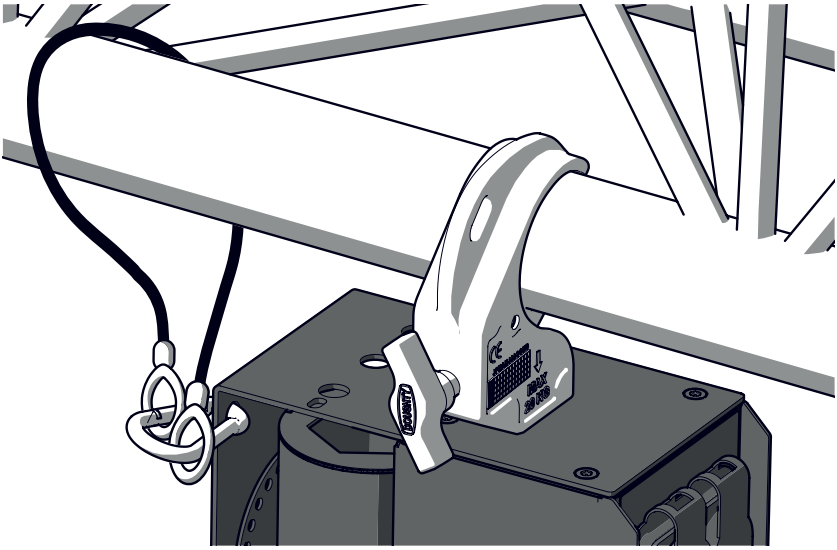

5 Inspect if the MAGICFX® POWERSHOT II is mounted firmly and secured correctly.

3.3 CONNECT POWER

1 Make sure that the power output on your controller or power switch is disabled.

2 Connect a power cable to the power input.

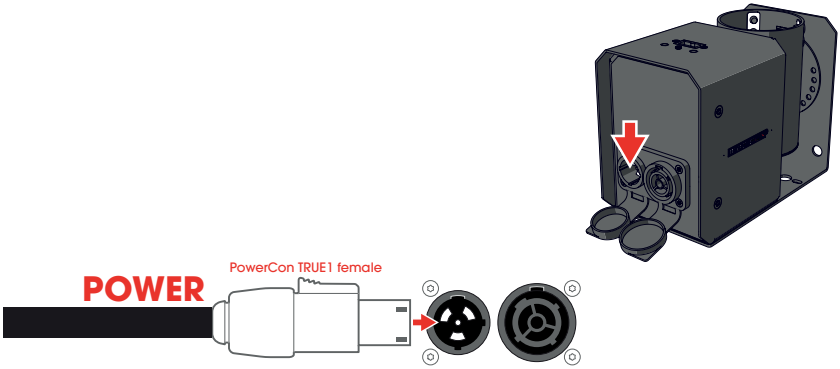

3 Connect the other end to your controller or power switch.

4 Optionally connect another machine to the power output with a power link cable.

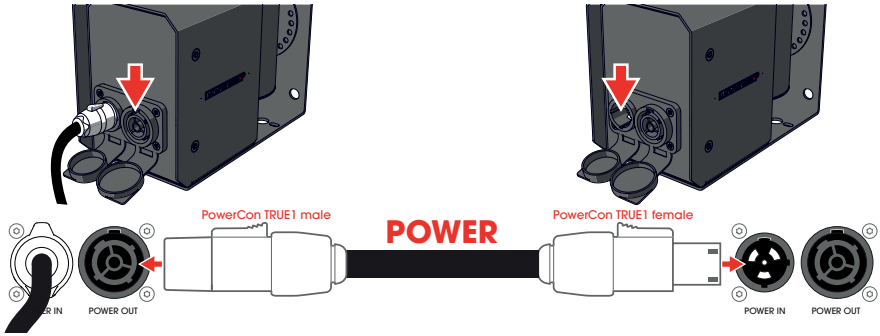

⚠ CAUTION Do not connect more units to a single electrical circuit than the installed fuse is able to handle. (Calculate the summed load with the electrical data from Chapter 1)

5 Switch the power on and check if the POWER LED lights up.

⚠ CAUTION Make sure that no electric cannon is connected when testing the power.

6 Switch off the power.

3.4 PLACE ELECTRIC CANNON

1 Firmly lock an unused electric cannon between the leaf springs in the pipe.

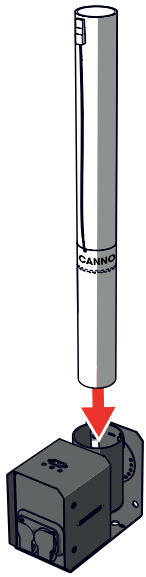

2 Secure the electric cannon to the MAGICFX® POWERSHOT II with a cannon clamp.

3 Pull the angle knob and set the pipe with cannon to the desired shooting angle. Release the angle knob to fasten the pipe. Check if you hear a clicking sound and whether the pipe is fastened correctly.

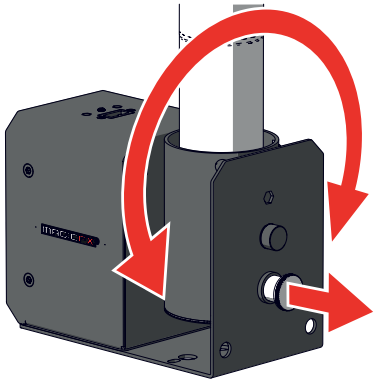

⚠ CAUTION	Make sure that the direct output will be free from persons and animals.

⚠ CAUTION	Make sure there are no freestanding objects or objects that can be damaged by the MAGICFX® POWERSHOT II within the output distance.

4 Make sure that the power is switched off (POWER LED is off).

5 Connect the power cable of the electric cannon.

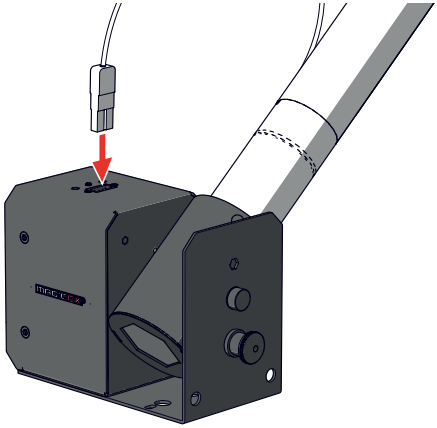

3.6 LET'S SHOOT!

1 Make sure that the direct output is free from persons, animals and objects.

2 When it's time to shoot, switch the power on.

3 Enjoy the view!

NOTICE For safety reasons: the power of the cannon connector will be shut down automatically after 4 seconds.

4 Switch off the power.

3.7 CLEAN UP

1 Disconnect the power cable of the used electric cannon.

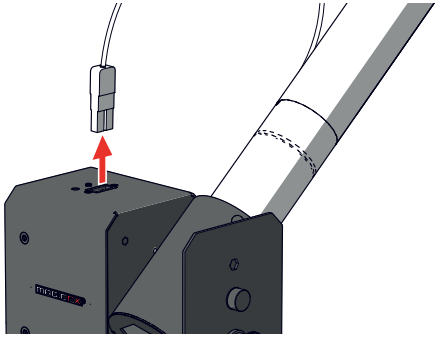

2 Remove the cannon clamp.

3 Remove the used cannon from the pipe and dispose it without harming the environment.

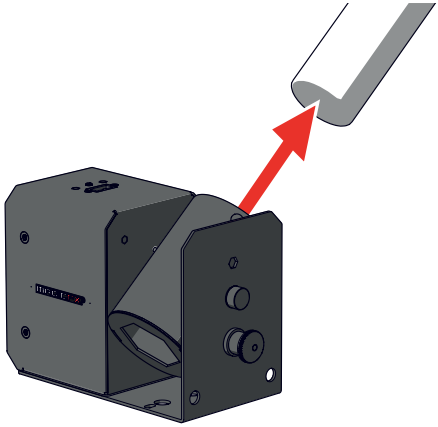

4 Disconnect the power cable and remove the MAGICFX® POWERSHOT II.

4 MAINTENANCE

To achieve the maximum service life of the MAGICFX® POWERSHOT II you must regularly clean the MAGICFX® POWERSHOT II and test if it is functioning correctly.

Contact MAGIC FX if the MAGICFX® POWERSHOT II is not functioning correctly.

⚠ DANGER Do not replace parts yourself; always consult MAGIC FX if necessary.

5 TROUBLESHOOTING

Always contact MAGIC FX if any malfunctions or errors occur that cannot be solved with the instructions as described in this manual.

6 CORRECT DISPOSAL

This symbol on the product and / or accompanying documents means that used electrical and electronic products should not be mixed with general household waste. For proper treatment, recovery and recycling, please take this product to designated collection points where it will be accepted free of charge.

Alternatively, in some countries you may be able to return your products to your local retailer upon purchase of an equivalent new product.

Disposing of this product correctly will help save valuable resources and prevent any potential negative effects on human health and the environment, which could otherwise arise from inappropriate waste handling.

Please contact your local authority for further details of your nearest designated collection point.

Penalties may be applicable for incorrect disposal of this waste, in accordance with your national legislation.

7 EC DECLARATION OF CONFORMITY

According to Annex III A Low Voltage Directive 2014/35/EU

MAGIC FX B.V. declares as manufacturer and composer of the technical construction file that the product with the following specifications:

Name machine	: MAGICFX® POWERSHOT II
Type	: MFX0304
Voltage	: 220 – 240Vac 50-60Hz
Serial number	: on product
Year of construction	: on product

Is in conformity with the minimal safety regulations as stated in the following directive(s):

- LVD (2014/35/EU) Low Voltage Directive
- EMC (2014/30/EC) ElectroMagnetic Compatibility
- RoHS (2011/65/EU) Restriction of the use of certain Hazardous Substances
- WEEE (2012/19/EU) Waste Electrical & Electronic Equipment

The following harmonized standards were applied:

- NEN-EN-ISO 12100:2010, Safety of machinery - General principles for design - Risk assessment and risk reduction.
- NEN-EN-IEC 60204:2010, Safety of machinery - Electrical equipment of machines - Part 1: General requirements.
- NEN-EN-IEC 61000-6-3:2007/A1:2011, Electromagnetic compatibility (EMC) - Part 6-3: Generic standards - Emission standard for residential, commercial and light-industrial environments.

☐ Original declaration of conformity
☑ Translation of the original declaration of conformity

Name manufacturer	: MAGIC FX BV
Address	: Schouwrooij 27, 5281 RE BOXTEL
Country	: The Netherlands

CEO : B. Veroude
Date : 31-5-2018

Signature :

MAGICFX®

WWW.MAGICFX.EU