www.solidstatelogic.com

BiG SiX
User Guide

BiG SiX

Solid State Logic
OXFORD • ENGLAND

Solid State Logic

OXFORD • ENGLAND

Visit SSL at:
www.solidstatelogic.com

© Solid State Logic

All rights reserved under International and Pan-American Copyright Conventions

SSL® and Solid State Logic® are ® registered trademarks of Solid State Logic.

BiG SiX™, SiX™ and SuperAnalogue™ are trademarks of Solid State Logic.

All other product names and trademarks are the property of their respective owners and are hereby acknowledged.

No part of this publication may be reproduced in any form or by any means, whether mechanical or electronic,without the written permission of Solid State Logic, Oxford, OX5 1RU, England.

As research and development is a continual process, Solid State Logic reserves the right to change the features and specifications described herein without notice or obligation.

Solid State Logic cannot be held responsible for any loss or damage arising directly or indirectly from any error or omission in this manual.

PLEASE READ ALL INSTRUCTIONS, PAY SPECIAL HEED TO SAFETY WARNINGS.

E&OE

November 2021

Revision History

Revision V1.0, September 2021 - Initial Release

Revision V1.1, November 2021 - Updated 'Sum to Mix Bus' details

Revision V1.2, November 2021 - Updated compressor details

Introduction to BiG SiX

In the mid '70s Solid State Logic designed the first A Series Console and Studio Computer. The idea behind the project was to build a system for the company's studio which was buried deep in the Oxfordshire countryside, in a small village called Stonesfield. SSL's development of advanced analogue mixing consoles has been continuous since those early days.

As the name implies, BiG SiX is the natural expansion of SSL's successful SiX desktop console. Both BiG SiX and SiX are studio grade, SuperAnalogue consoles that deliver all of the quality and flexibility audio professionals expect from SSL, but in very compact footprints. SiX is designed to be small enough to fit into hand luggage or a half 19" rack space, BiG SiX is over twice the size, fits a full 9U of 19" rack space and has many additional features, but with the same focus on audio quality and flexibility of use.

Like SiX, but bigger...

BiG SiX is the big sister to SSL's acclaimed SiX console. Although both BiG SiX and SiX are small by SSL standards they carry the same values and inherited DNA. What follows are some of the key elements that make BiG SiX a professional product for the highest quality audio applications.

Fully balanced inputs and outputs

All of BiG SiX's inputs and outputs are fully balanced (with the exception of the Phones output). This means professional equipment with balanced connections can be properly interfaced allowing longer cable lengths without noise/hum pick-up penalties and the best signal to noise performance from the whole signal chain.

Short is beautiful…

To provide the purest audio signal paths, BiG SiX has several features not normally found on small footprint mixing consoles e.g. the channel processing is switched, allowing it to be removed from the signal path if it's not being used. It's definitely worth taking some time to understand the BiG SiX block diagram and reading the examples later in this manual. We hope you'll really unlock the versatility of the console when discovering the many signal paths that are available and the multiple ways they can be used.

Meter scales and response

The upper LED meter points on BiG SiX's main meters have been carefully chosen. The console is designed with a huge +27 dBu headroom and the meters have defined segments for +24 dBu and +18 dBu, this is to match the two most common 0 dB Full Scale (dBFS) alignment standards, i.e. European/EBU at 0 dBFS=+18 dBu and the US/SMPTE standard at 0 dBFS=+24 dBu ensuring optimum performance for converters and proper gain structure throughout the signal chain. The meters in BiG SiX have been designed with a fast 'peak' response (rise time to 60% Full Scale Deflection approx 1 ms @ 1 kHz) and a slower release time to give the ability to meter fast peaks while still being able to show useful signal levels.

Converter alignment levels

The sixteen A to D and D to A converters in BiG SiX are aligned for 0 dBFS=+24 dBu to give the optimal performance from the console's dynamic range.

Power and power management

You will have noticed that BiG SiX is powered by an external power supply with a multipin connector. This significantly helps the design and performance of BiG SiX. It moves the power supply's electromagnetic interference away from the SuperAnalogue circuits inside BiG SiX. This allows us to design the internal electronics to have a bandwidth as wide as possible and thus deliver the great phase and transient response SSL large format console users have come to expect in a very small footprint package. Another thoughtful design feature for an analogue console is how the power rails are ramped on power-up to minimise thumps on monitor and headphone outputs.

This Page Is Intentionally Almost Blank!

About SuperAnalogue

SSL's SuperAnalogue technology is the sum of an applied design philosophy, constant invention, and dedication to optimising every detail of our precision audio products. There are many contributing aspects, including our bespoke circuits, ground-breaking low-noise gain control, servo-coupled amplifier stages, and many more. The design of BiG SiX is unique amongst small footprint mixers in that it uses SuperAnalogue technology to bring large console sonics and processing into a very compact design.

Listed below are some of the main benefits SuperAnalogue philosophy brings to BiG SiX.

Wideband audio

Typically a 20 kHz upper frequency limit is recognised as adequate for audio. A lucky few people can identify frequencies beyond 20 kHz. However, there is a secondary hearing mechanism, directly related to 'rise-time' (the transient performance of components) and evidence to show that even though the basic frequency spectrum of human hearing degrades over time, our sensitivity to rise-times does not. In addition, Transient Intermodulation Distortion (TIM) is a real - if difficult to measure - issue that brings high frequency 'waste' to bear on the audible spectrum in poor or bandwidth-limited designs. Feedback paths in amplifier circuitry are a good example. For fast, accurate rise times and low TIM, SSL implements precision, high-frequency analogue technologies and tests everything to better than 80 kHz. BiG SiX's main signal path frequency response extends to beyond 100 kHz.

Elimination of signal path electrolytic capacitors

The physical construction of electrolytic capacitors means that their performance is imprecise and they are vulnerable to electromagnetic interference so even expensive 'high-quality' electrolytics do not meet our standards. In addition, over time and with temperature variations, electrolytic capacitors degrade and become 'leaky' resulting in significant noise issues, altered sonic character, and shortened product life. SSL avoids using electrolytic capacitors for decoupling between analogue stages wherever possible. Instead we use advanced DC servo coupling techniques for wide bandwidth, low noise and high precision DC offset control.

Discrete design and innovation

Many modern analogue audio products are the result of the 'cookbook' approach where off-the-shelf blocks are strung together to fulfil a practical brief, but lack the additional details that take them from functional to fantastic. To do that, you have to understand how to augment commercially available components with discrete elements, do original research and sometimes even design your own components.
SSL does not do 'data-sheet design' and continues to optimise and improve upon data-sheet specifications and 'serving suggestions' - we have even licensed our advances back to semiconductor manufacturers. BiG SiX represents the cumulation of over 40 years of experience and expertise in improving the canon of analogue music electronics to continually exceed and progress our own high standards.

Not one component, a whole design philosophy

Our philosophy is simple, we spare nothing in designing and manufacturing the best precision music tools available anywhere. There is no single magic stage in BiG SiX - everything from the pre-amps through the line level electronics, signal processing and output stages plays its part.

Table of Contents

Introduction 1

Unpacking 2
Safety Notices 2
Heat & Ventilation and Rack Mounting Option 2
USB-C Digital Interface 3
USB Cables & Power 3
USB Hubs 3
USB Drivers, Mac and Windows 3

Console Overview 4

Front panel 4
Rear Panel 5

Detailed Description 7

SuperAnalogue Mono Channels 7
SuperAnalogue Pre-Amp input 7
Mic Input (XLR) 7
Line Input (¼" TRS) 7
USB Return (From USB 'n') 7
Channel EQ 8
Channel Compressor 9
Channel Insert 9
Stereo Cue Sends 10
Channel Fader and Pan 10
USB Send 10
Stereo channels 11
SuperAnalogue Stereo Input 11
Stereo Cue Sends 11
Stereo EQ 11
Channel Fader and Pan 11
USB Send 11
Monitor section 12
MAIN and ALT monitor outputs 12
Headphone (Phones) outputs 13
Monitor Source section 13
External 1 and 2 Levels 13
Stereo Cue Master Section (including Talk Input) 14
Talk Input Pre-amplifier and LMC 14
Talk Input and LMC 15
Artist Cue Mixes 15
Foldback Outputs as Effects Sends 15
Main Meter 16
Bus B Master 16
Main Bus 16
External to Main Bus Summing 16
Main Bus Insert 16

SUM INPUT TO MAIN BUS 17
ST CUE 1 TO G COMP & SUM TO MAIN BUS 18
G-Series Bus Compressor 19
USB-C Interface 20
USB Cables & Power 20
USB Hubs 20
USB Drivers, Mac and Windows 20
USB Signal Routing and Block Diagram 25
USB Returns 1 - 16 (Signal flow from the DAW to BiG SiX) 25
USB Sends 1 - 16 (Signal flow to the DAW from BiG SiX) 25
Application Examples - Desktop Studio 28
Application Examples - Small Project Studio, Record/Overdub 30
Application Examples - Small Project Studio - Hybrid SuperAnalogue Mixdown 32
Application Examples - Post Production - ADR or Foreign Language Dubbing 34
Application Examples - Podcast Studio 36
Troubleshooting & FAQs 37
Troubleshooting Tips 37
Warranty 38
All returns 38
Appendix A - Physical Specification 39
Connector Details 39
Mono Channels 39
Stereo Channels 39
Insert Sends/Returns 40
DC Power Inlet 40
Appendix B - Performance Specification 41
Audio Performance 41
SuperAnalogue Channel Microphone Amplifier 41
SuperAnalogue Channel Line Input Amplifier 41
Channel Equaliser 42
Channel Compressor 42
SuperAnalogue Stereo Channel Line Input Amplifier 42
Overall Channel Signal Chain Specifications 43
Overall Console Noise 43
ADC and DAC Converter 43
Environmental Requirements 43
Appendix C - BiG SiX Block Diagram 44
Appendix D - Recall Sheet 45

This Page Is Intentionally Almost Blank!

Introduction

BiG SiX is a studio grade, SuperAnalogue mixing console that delivers all of the quality and flexibility audio professionals expect from an SSL console, but in a package that is designed to fit the compact footprint needed for smaller personal studios. Its design doesn't compromise on performance because of its size, but delivers a powerful set of professional features in a 9U 19" rack width package.

BiG SiX incorporates professional quality A to D and D to A converters and a multi-channel USB DAW interface, however the connections and signal flow is such that it can be used as a wholly analogue mixing console, without reliance on the digital connection.

Audio Excellence

- Four SuperAnalogue wide gain range mic pres for pristine recording quality
- Four wide gain range stereo line inputs
- Individually switchable phantom power on each Mic Input
- Line level input with true HiZ (1 MΩ) impedance switch for passive coil inputs (e.g. guitar pickups)
- Four recording channels with fully balanced inserts, simple three band SSL EQ and Dynamics and true bypass processing switching
- Fast, accurate peak response LED meters
- Inbuilt 16 channel high quality AD and DA Converters with USB-C interface for DAWs

Mixing Versatility

- 18 channel stereo SuperAnalogue summing
- Main bus with fully balanced insert
- Simplified SSL Bus Compressor
- 100 mm studio grade long throw faders
- Stereo Mix Bus Summing Input to cascade mixing consoles.

Application Flexibility

- A ‘proper’ foldback section with two stereo send/cue buses with talkback, local monitoring plus two stereo cue feeds
- Versatile B-Bus/Mute switching provides record and mix buses for simple overdubs
- Useful, flexible signal routing and summing
- Versatile ‘summing’ monitor section with two external source selectors
- Two Headphone Outputs with separate source selectors
- ‘Listen mic compressor’ with flexible routing for studio talkback or more creative applications

Unpacking

The unit has been carefully packed and inside the box you will find the following items.

- BiG SiX Console
- IEC power cord or cords (depending on territory)
  - 1.8 m, 6 A IEC mains Cable - UK Plug (SSL Part # 32VGL3A1)
  - 1.8 m, 6 A IEC mains Cable - EU Plug (SSL Part # 32VGL3A3)
  - 1.8 m, 6 A IEC mains Cable - US Plug (SSL Part # 32VGL3A2)
  - 1.8 m, 10 A IEC mains Cable - JPN Plug (SSL Part # 32VGL3J3)
- External Power Supply with multi-pin connector (SSL Part # 37147HHJ)
- 1.5 m USB-C to USB A cable (SSL Part # 66AURM20)
- 1.5 m USB-C to USB-C cable (SSL Part # 66AURM00)
- Safety Guide
- Quickstart Guide
- Registration card

It is always a good idea to save the original box and packaging, just in case you ever need to send the unit in for service.

Safety Notices

IMPORTANT: Please read the safety notice information included in the Safety Guide supplied inside the box before using BiG SiX.

Heat & Ventilation and Rack Mounting Option

BiG SiX packs a lot of SuperAnalogue electronics into its compact size. It is designed to get warm in normal operation. Please consult the operational specifications in Appendix B of this User Guide to make sure that it is used within its designed environmental parameters.

Optional rack mounting kits to fit a BiG SiX console within a standard 19-inch rack are available.

The rack mount kit has the SSL Part Number: 729752XR

Whenever rack mounted, or mounted in furniture, please ensure at least 1 inch (2cm) of ventilation space is left available in the front and rear of the console. You will see the ventilation holes in the console chassis - these need to have clear airflow to cool the unit correctly.

USB-C Digital Interface

BiG SiX contains a class compliant USB interface to connect to a PC or MAC. The interface is paired with 16 high quality A to D and D to A converters that are connected to the SuperAnalogue signal chain in BiG SiX.

USB Cables & Power

Please use one of the provided USB cables ('C' to 'C' or 'C' to 'A') to connect BiG SiX to your computer. The connector on the rear of BiG SiX is a 'C' type. The type of USB port you have available on your computer will determine which of the two included cables you should use. Newer computers may have 'C' ports, whereas older computers may have 'A'. As this is a USB 2.0 compliant device, it will make no difference to the performance as to which cable you use.

BiG SiX is powered independently from the computer's USB-bus power. When the unit is locked to USB correctly, the green USB LED will light a steady green colour. For best stability and performance, we recommend using one of the included USB cables. Long and low quality USB cables (especially 3m and above) should be avoided as they tend to suffer from inconsistent performance.

USB Hubs

Wherever possible, it is best to connect BiG SiX directly to a spare USB port on your computer. If you do need to connect via a USB 2.0 compliant hub, then it is recommended that you choose one of high enough quality to provide reliable performance - not all USB hubs were created equal. With BiG SiX, we optimise the audio performance of a USB interface and as such, some low-cost self-powered hubs might not always be up to the task. Usefully, you can check out our FAQs at **solidstatelogic.com/support** to see which hubs we've successfully used and found to be reliable with BiG SiX.

USB Drivers, Mac and Windows.

Mac

The USB interface in BiG SiX is Core Audio compliant, which means it should be seen by a Apple's OSx software without the need for any additional drivers. Core Audio was introduced by Apple in OSx version 10.3 (Panther), however the BiG SiX USB interface has only been tested with Apple OSx version 10.14 (Mojave) or later.

Windows

Windows based PCs will need to install the SSL USB Audio ASIO/WDM driver, which can be found in the Support/Downloads section of the SSL website at www.solidstatelogic.com/

More information about the use of the USB interface can be found in the USB section of this Guide.

Safety Notices

Please read the Important Safety Notices at the end of this User Guide before use.

System Requirements

Mac and Windows operating systems and hardware are constantly changing. Please search for *'BiG SiX Compatibility'* in our online FAQs to see if your system is currently supported.

Console Overview

Front panel

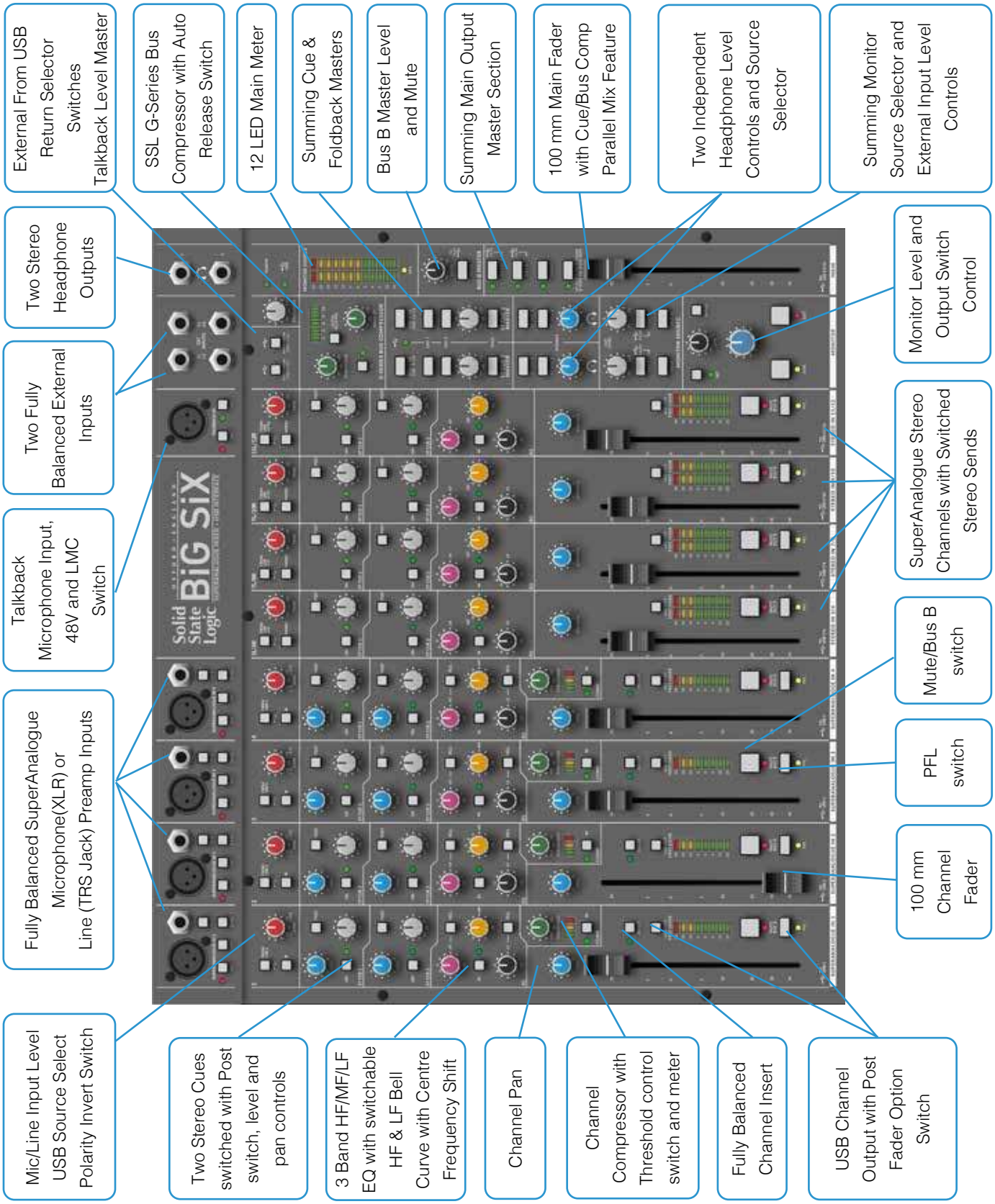

Rear Panel

The rear panel of SiX is shown below. The connectors are identified on a panel above the connector panel. All audio connectors are Balanced TRS 1/4" Jacks.

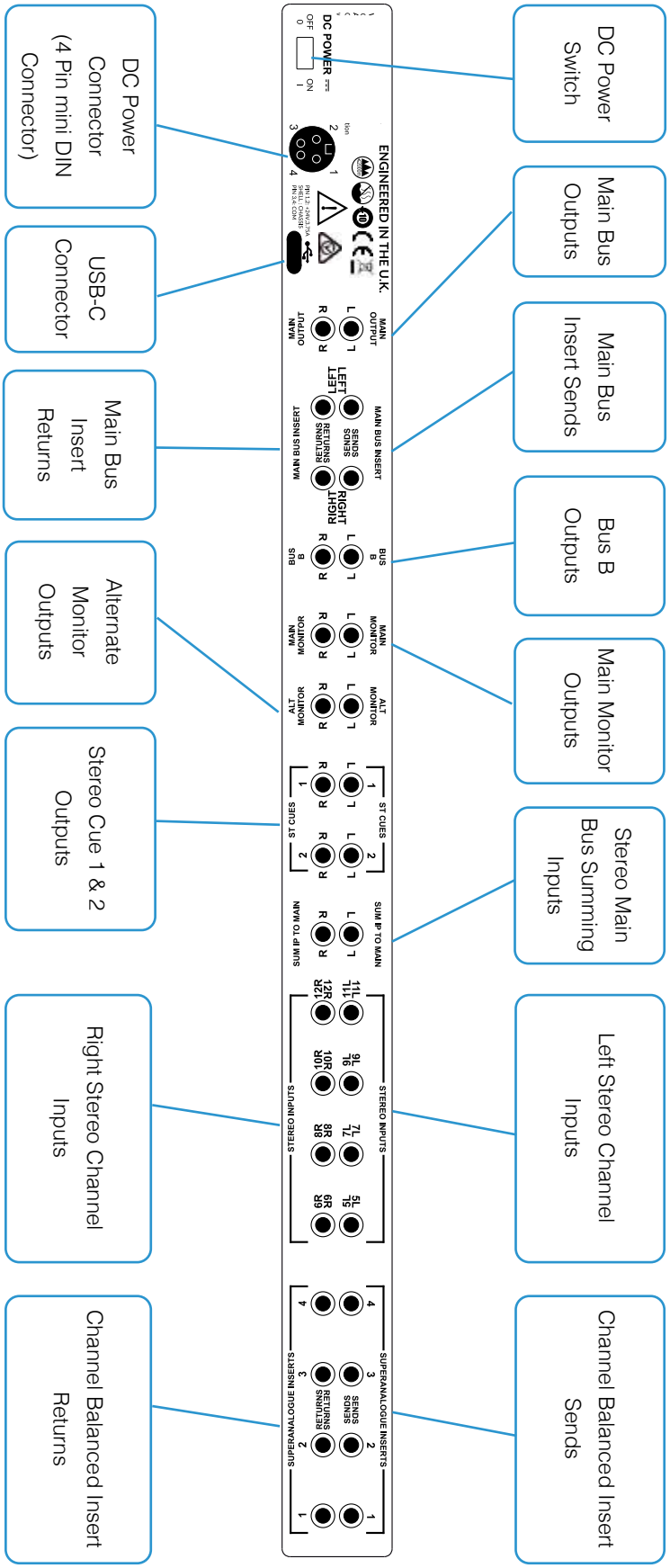

This Page Is Intentionally Almost Blank!

Detailed Description

SuperAnalogue Mono Channels

There are four SuperAnalogue mono channels on BiG SiX; each channel has identical facilities. This section explains the features found in each.

SuperAnalogue Pre-Amp input

BiG SiX's pre-amp is a wide gain range SuperAnalogue design inherited from SiX and developed from the mic pre-amps of the larger SSL Duality and AWS consoles. In these consoles, line and mic inputs are served by separate pre-amps. In BiG SiX, a wide gain range, ultra low noise SuperAnalogue design provides both Line and Mic facilities with a [Line] gain range switch to cover a wide range of source levels.

The pre-amp consists of a microphone input (XLR) and line level input (¼" TRS Jack Socket).

Mic Input (XLR)

The default microphone input uses SSL's SuperAnalogue design and includes individually switched 48 V phantom power. The Mic (XLR) input's nominal impedance is 1.2 kΩ.

Line Input (¼" TRS)

The XLR is the default source input, the source can be switched to the ¼" TRS jack line input by pressing the 'LINE' switch on the channel. The nominal Line Input impedance is 10 kΩ this can be changed to 1 MΩ using the Hi-Z switch. This input impedance makes this input suitable for very high impedance sources such as passive guitar pickups without the need for an external DI box.

The Gain control adjusts either the microphone pre-amp gain (+6 dB to +72 dB), or the Line amp gain (-3 dB to +63 dB), depending on the selected input source. Following the pre-amplifier is a switched 12 dB/oct, 75 Hz High Pass Filter (HPF) to reduce unwanted LF such as Microphone Rumble, AC noise etc.

USB Return (From USB 'n')

These are the D/A Converter outputs from USB Returns 1-4 and they are selectable as unity gain inputs after the Mic/Line Pre-Amp and are before the polarity invert and High Pass Filter (HPF) sections as shown in the block diagram below.

Input Section Block Diagram

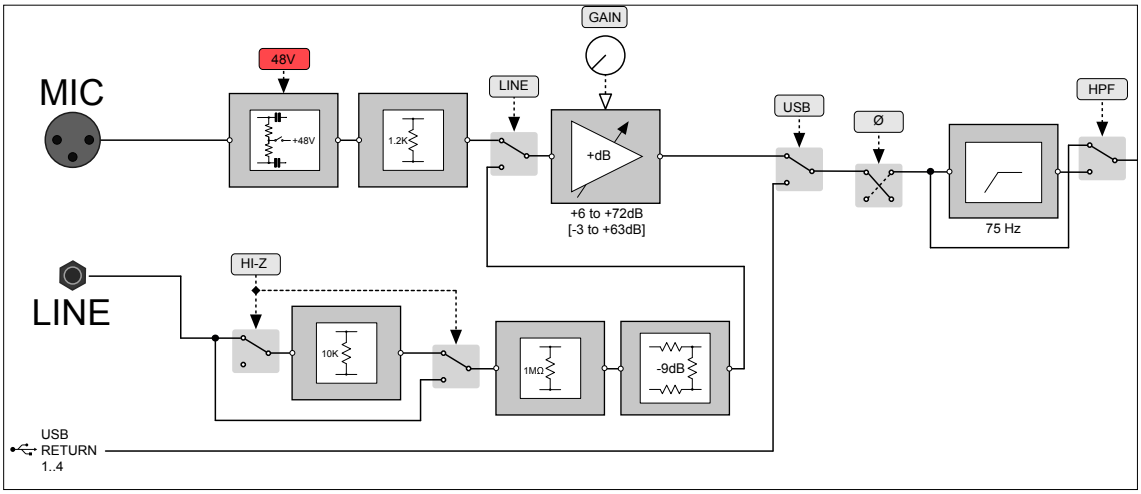

Channel EQ

The channel EQ on BiG SiX has its roots in SSL's classic E series EQ. It is a gentle, broad stroke three-band design with high and low shelving filters at 3.5 kHz and 60 Hz, adjustable from +15 dB to -15 dB of gain and a fixed Mid Frequency control at 700 Hz. The HF and LF bands can be independently switched between shelving and bell curves using the BELL switch. A useful feature of the bell curves is that they change centre frequency to operate at 5 kHz and 200 Hz giving greater versatility from the HF and LF sections.

The EQ is switched 'in' circuit or completely bypassed using the IN switch. This small detail guarantees no influence on the channel's exceptionally flat frequency response from the tolerance of the EQ control centre detent positions.

HF & LF Shelf & MF Frequency Response

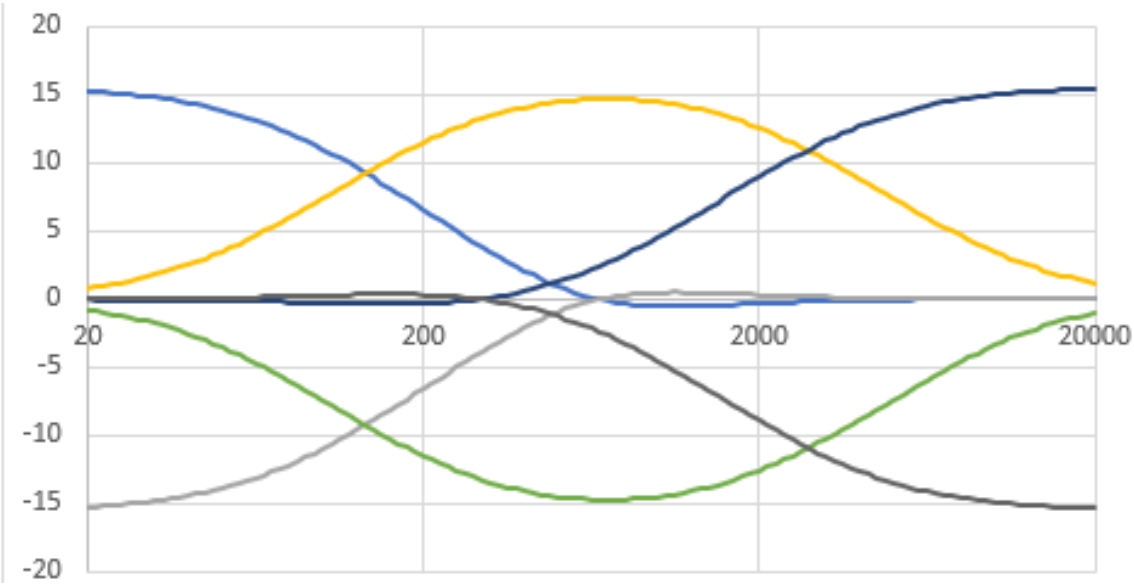

HF & LF Bell & MF Frequency Response

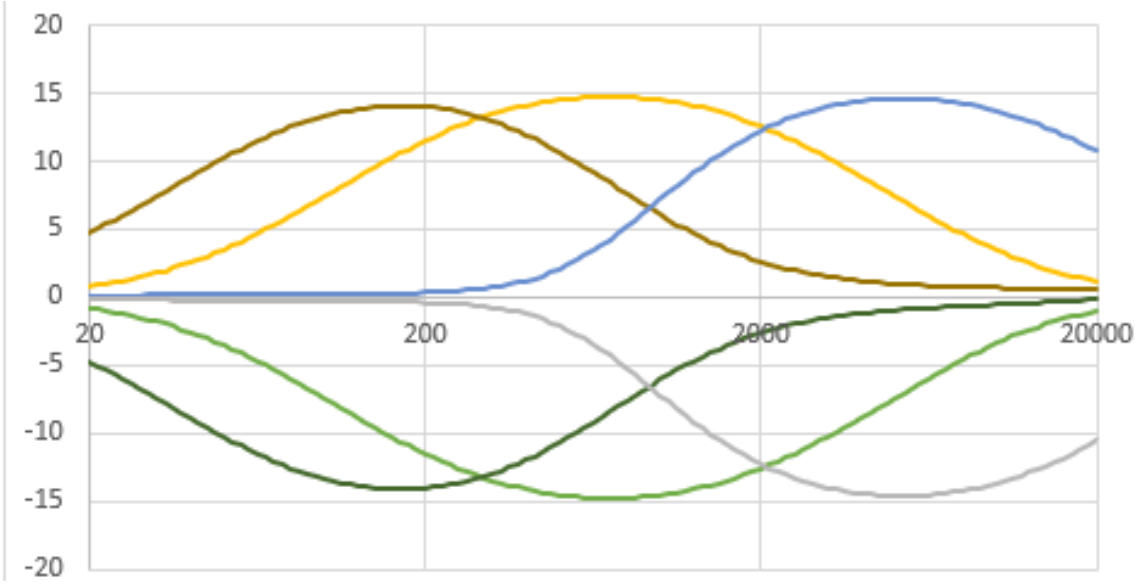

Channel Compressor

The channel compressor in BiG SiX is an evolution of the design in SiX. As with the design in SiX, it is inspired by the sophisticated channel dynamics sections of earlier SSL analogue consoles, but with some clever design features to give powerful and versatile performance from its deceptively simple appearance.

The attack time of the compressor is somewhat program dependant and varies between approximately 8 ms and 30 ms. This allows the compressor to operate smoothly when working with a wide variety of content. The release time is approximately 300 ms and the ratio is a gentle 2:1. The knee of the compressor has been slightly softened from the version in SiX to reduce artefacts on bass signals. The single user control is for the compressor Threshold adjustable between +10 and -20 dBu and is accompanied with three LEDs indicating the amount of gain reduction being applied. The circuit has automatic make-up gain to help maintain signal level for the full range of threshold settings.

As with the EQ circuit, the compressor can be completely bypassed using the IN switch, providing a simple way to compare the compressed and uncompressed signals. This also prevents component tolerances from influencing the sound of the channel strip when the Threshold is turned to minimum.

Channel Processing Overview

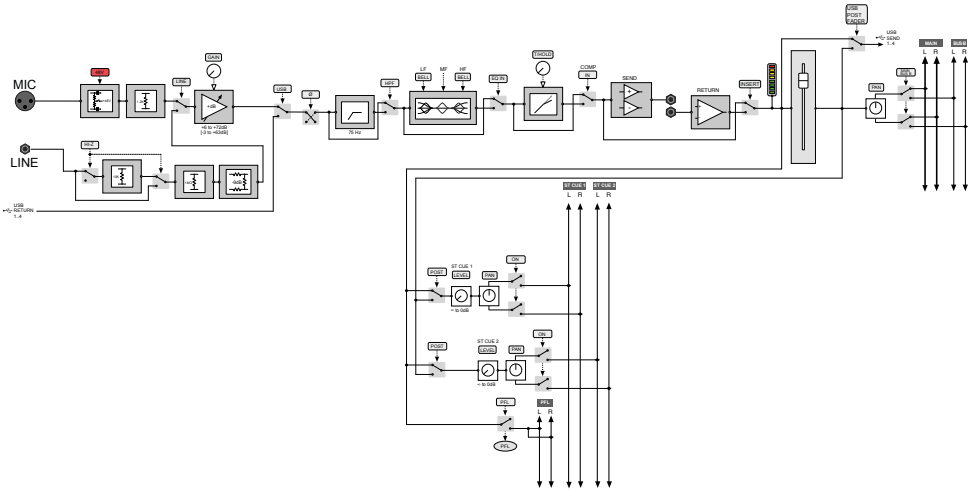

Channel Insert

Following the EQ and compressor in the channel signal flow is a fully balanced insert point. In common with larger SSL consoles, the Insert Send is always active, while the Insert Return switches into the signal path when selected.

The primary use of the insert is to bring external processing into the channel signal path. For example, to insert a more surgical EQ or fully featured dynamics unit such as those found in SSL's X-Rack or 500 series modules.

Another benefit of this configuration and the unity gain design is that the Insert Send can be used as a pre-fade, post-processing direct channel output to act as a record feed. This leaves the Insert Return free to be used as a pre-fader/pre-pan path input by selecting the Insert IN switch and feeding a separate line level signal into the Insert Return. This is the shortest signal path to the A/D converter for the USB channel output connected to the SuperAnalogue channel.

The channel insert sends and returns are found on the dedicaed rear panel Channel Insert Send and Return 1/4" balanced TRS connectors.

Stereo Cue Sends

Each mono channel can access two Stereo Cue sends with independent Level and Pan controls. The ON switch sends the channel signal to the cue bus indicated by a green LED.

Both sends are fed from channel pre-fade, post-insert, but can be switched to Post Fader by engaging the corresponding CUE POST switch in the Foldback master section.

The channel signal is unity gain to the Cue Bus when the Send Level control is fully clockwise and the Pan control is hard left or right. The centre Pan level is -4.5 dB from 0 dB to each bus, - a traditional SSL compromise between typical mono -3 and -6 dB centre points for constant perceived level or power.

Channel Fader and Pan

The channel signal level is controlled by a high quality 100 mm fader. The Pan pot directly above this pans the signal to the Main Mix Bus. Next to the Fader is the Channel Meter, as well as the channel Mute/Bus B switch and PFL switch.

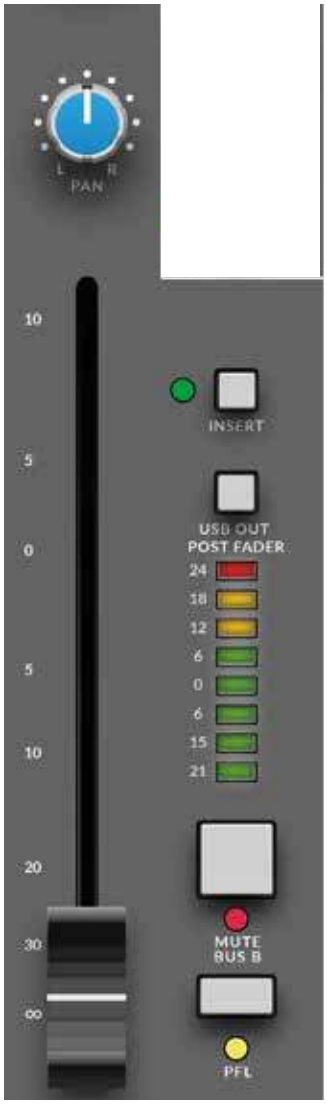

The Fader law is designed to provide more resolution around the 0 dB point, allowing subtle level changes from modest fader movements. The fader output is unity gain to the bus when the Pan control is hard left or right. The centre Pan level is -4.5 dB from 0 dB to each bus.

The Mute/Bus B switch mutes the channel feed to the Main Mix Bus, whilst also sending the channel signal post-fader to the additional stereo Mix Bus B.

The PFL (Pre Fade Listen) switch sends the channel signal to the PFL bus and interrupts the monitor bus without affecting the main signal output to the Main Mix Bus.

The eight LED Channel Meter is fed from before the fader but after the channel processing. The fast response peak meter has defined segments for +24 dBu and +18 dBu as well as 0 dBu. The meter has a fast 'peak' response (rise time to 60% Full Scale Deflection approx 1 ms @ 1 kHz), and a slower release time to meter peaks while still showing useful signal levels.

USB Send

By default there is an A/D converter connected to the USB Send Pre Fader output of each SuperAnalogue channel strip. This can be individually switched to Post Fader using the USB OUT POST FADER switch. These USB Sends are always post processing and so can be used for per path outputs for recording in a DAW.

The "TO USB n" legend at the base of each SuperAnalogue channel fader shows which USB send the channel is connected to.

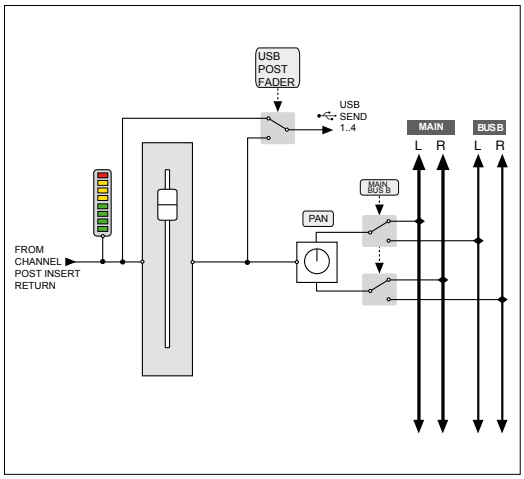

Stereo channels

SuperAnalogue Stereo Input

The inputs to the stereo channels are on ¼" TRS balanced jack connectors on the rear of the unit. These are labelled 5L, 6R, 7L, 8R, 9L, 10R, 11L and 12R for the four pairs of inputs. Optionally the stereo channel inputs can be switched from DA converters from relevant USB returns by selecting the USB switch at the top of the strip. The USB input is before the input Trim gain control. The Trim control adjusts the stereo Line amp gain from -10 to +20 dB with a centre detent at unity gain.

The rear TRS Jack inputs have an automatic 'Mono From Left' feature, i.e. if only a single jack connector is used in the Left input, then the same signal is fed to the Right input. When a jack is inserted into the right input, the Left and Right signals are passed separately through the channel. Additionally, there is a front panel MONO switch which mono's both left and right inputs.

Stereo Cue Sends

There are two stereo Cue sends on each stereo channel with independent level controls. These can be switched on or off using the ON switch; a green LED indicates that the Cue send is switched on.

The sends are fed from channel pre-fader post-insert, but can be switched to post fader with the individual POST switches. The channel signal is unity gain to the Cue Bus when the Send Level control is fully clockwise.

Stereo EQ

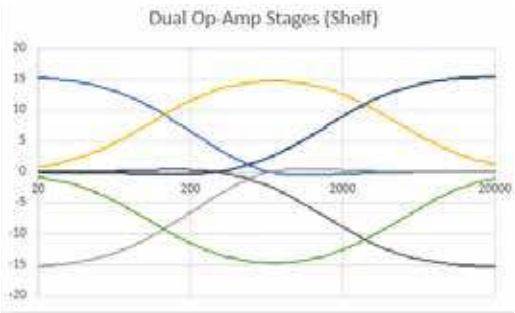

The stereo EQ is similar to the channel EQ in that it's a gentle, broad stroke three-band design with high and low shelving filters at 3.5 kHz and 60 Hz, adjustable from +15 dB to -15 dB of gain and a Mid Frequency control centred at 700 Hz.

Channel Fader and Pan

The channel level is controlled by the 100 mm stereo fader, with a Balance control directly above. This adjusts the balance between the left and right input signals to the main mix bus.

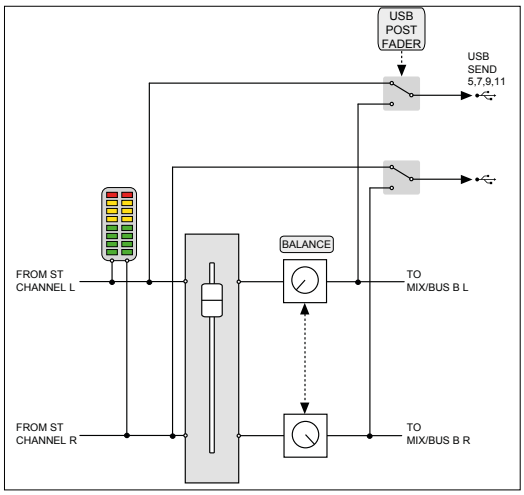

The Mute/Bus B switch mutes the channel feed to the Main Mix Bus, whilst also sending the channel signal post-fader to the additional stereo Mix Bus B.

The PFL (Pre Fade Listen) switch sends the channel signal to the PFL bus and interrupts the monitoring to switch to this bus without affecting the signal output to the Main Mix Bus. The eight LED Stereo Channel Meter is fed before the fader, but after the channel processing.

USB Send

By default there is a A/D converter connected to the the USB Send Pre Fader output of each SuperAnalogue channel strip, for the stereo channel, these are conneced in odd/even pairs, e.g. Send 5/6. The sends can be switched in pairs to Post Fader using the USB OUT POST FADER switch.

Monitor section

The monitoring facilities in BiG SiX are very comprehensive given the size of the console. The block diagram below shows the structure of the Main Monitor, Alternate Monitor and Headphone outputs.

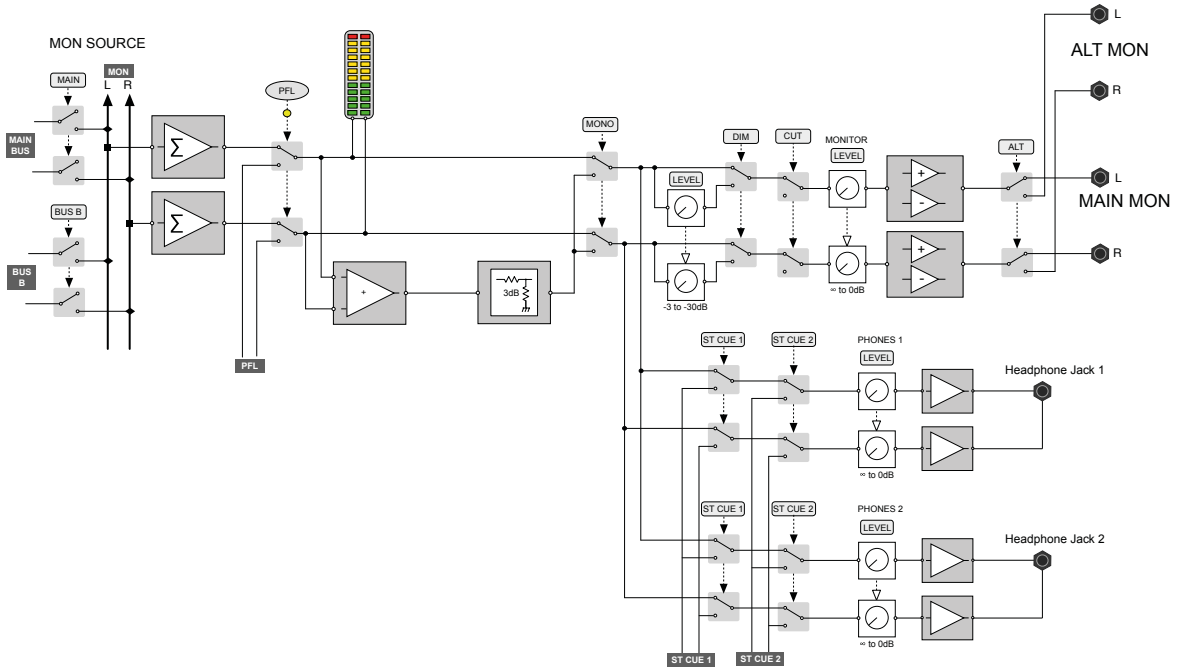

MAIN and ALT monitor outputs

The monitor section has two sets of balanced outputs for loudspeakers labelled MAIN MONITOR and ALT MONITOR (See rear connector layout below). By default, the MAIN MONITOR output is used. Pressing the ALT key on the front panel switches the Monitor feed to the ALT MONITOR output. Both Main and Alt outputs use balanced ¼" jack Sockets on the rear connector panel.

The Monitor outputs are Off when the Monitor Level is fully anti-clockwise (0) and at unity when fully clockwise (11).

Below the Monitor Level control are buttons for DIM and CUT. The CUT button mutes all of the monitor outputs. The DIM button lowers the monitor output level as controlled by the DIM level knob which is directly above the Monitor Level control in the Monitor Source section.

The MONO switch sums the monitor output to Mono with a -3 dB level drop.

BiG SiX Rear Connectors

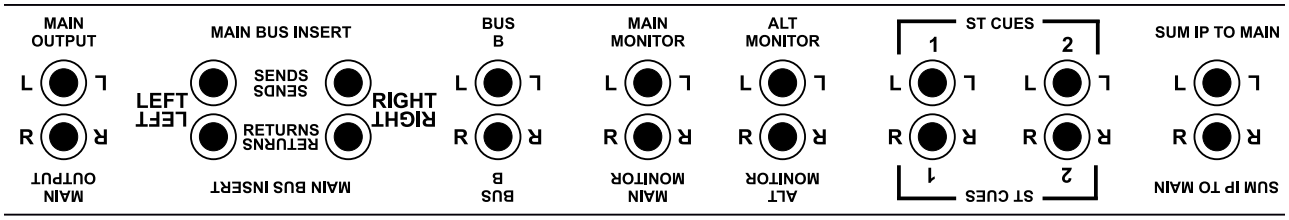

Headphone (Phones) outputs

In addition to the Main and Alt loudspeaker outputs, BiG SiX has two stereo headphone output on ¼" Stereo Jacks on the upper connector panel above the Power indicator.

Each headphone level is independently controlled by the two PHONES knobs above the Monitor Level control. By default, the headphone outputs follows the MONITOR SOURCE selection. However, the headphone outputs can also be switched to monitor Stereo Cue buses 1 & 2 independently of the Monitor selection, using the ST CUE 1 and ST CUE 2 switches above the level controls. These switches intercancel with the lower switch (CUE 2) taking priority. The Stereo Cue feeds to these switches are after the additional features of the Foldback section, i.e. after Talkback and the External Source selection. This allows these outputs to be used for artist feeds, however care needs to be taken to prevent the Talkback feeding back into the headphones when both the Foldback/Talkback Mic and the Headphone outputs are being used.

Monitor Source section

The MONITOR SOURCE section controls the signals fed to the Monitor Level and the Headphone Outputs. A block diagram of this section can be seen on the next page. A powerful and unusual feature of the Monitor Source section is that the sources sum, rather than switch. This allows monitoring of external signals alongside the main mix buses while using these buses to feed audio recorders or other 'clean' feeds.

Buttons in the MON SOURCE section SUM signals into the monitor outputs as follows:

- MAIN - Main Bus - after fader, insert, compressor and source summing
- BUS B - Bus B after the level control and MUTE switch
- EXT 1 - External Input 1 after the level control
- EXT 2 - External Input 2 after the level control

The EXT inputs show a USB symbol, this is because the EXT inputs can be sourced from the USB D/A returns. A pair of switches next to the TALK LEVEL knob allow the EXT 1 and EXT 2 signals to be sourced from USB Returns 13/14 and 15/16 respectively. These switches over-ride the External Input TRS Jacks.

PLEASE NOTE: IF NONE OF THE ABOVE BUTTONS ARE SELECTED, THERE WILL BE NO SIGNAL TO THE MONITORS

External 1 and 2 Levels

Above the EXT 1 and EXT 2 monitor source switches are the level controls for the relevant External inputs. These level controls adjust the External level between off and +20 dB, with a detent at unity (0 dB). The law of these controls is designed to offer more fine control around unity gain, with a greater degree of tapering in the level control law towards the end positions. The External level set by these controls affects wherever the Ext signals are fed in the console (e.g. to the external summing into the Main Bus). They also effect the level of the USB Returns, if selected.

The block diagram for the Monitor Source and External Input section is shown on the next page.

Cue Outputs and External Inputs

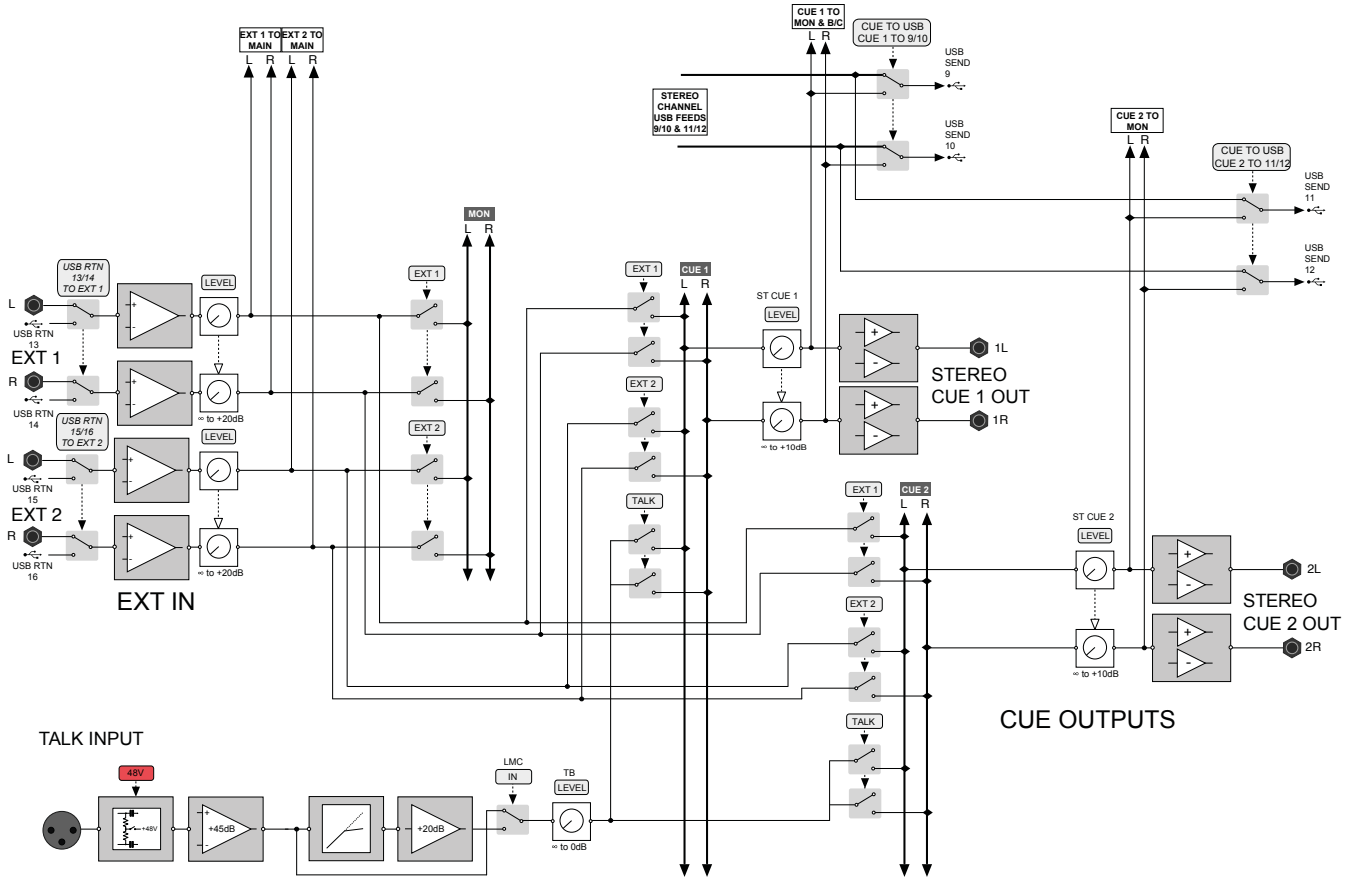

Stereo Cue Master Section (including Talk Input)

The two Stereo Cue buses in BiG SiX feed the Stereo Cue Master section. This section is split vertically with the left column controlling Stereo Cue 1 and the right controlling Stereo Cue 2.

The knobs in this section control the master level of the individual Cue outputs. As can be seen in the block diagram above, they are the last controls before the output (i.e. after the selected sources).

The upper switches in this section re-route the Cue Output via A/D converters to the relevant USB Sends. These signals replace the outputs from the relevant Stereo Channels. i.e. the Switch CUE 1 TO USB 9/10 replaces the Stereo Channel USB Sends to USB 9/10 with the output of the Stereo Cue 1 Master and similarly for the CUE 2 TO USB 11/12 switch. A green LED illuminates if either switch is selected.

Three switches sum TALK, EXT 1 and EXT 2, with the following functions:

- TALK - sums the output of the Talk section with the Cue Bus to the selected Cue Output
- EXT 1 - sums the External Source 1 input with the Cue Bus to the selected Cue Output
- EXT 2 - sums the External Source 2 input with the Cue Bus to the selected Cue Output

Talk Input Pre-amplifier and LMC

BiG SiX's Talk Input is an additional pre-amplifier and compressor circuit nominally designed to provide talkback facilities to the Stereo Cue outputs of the console, but with several other possible applications when the design is explored more fully.

Talk Input and LMC

The Talk input is a balanced female XLR connector. Below the connector are switches for Phantom Power and the LMC. LMC is the legendary SSL Listen Mic Compressor (here being used for Talkback, which is arguably its original design purpose).

The Talk Input feeds a fixed +45 dB high quality mic pre-amplifier and then optionally the LMC compressor. The LMC adds an additional +20 dB of make-up gain to restore signal level after the severe amount of gain reduction it introduces by design. The output level of the Talk circuit is controlled by the TALK LEVEL knob.

The LMC circuit is designed to allow a microphone connected to the Talk Input to maintain similar level signals regardless of whether the source is close or distant. i.e. if an engineer is close to the console and another person is sat on a couch behind the engineer, the artist will hear both of their voices legibly and at a similar level.

The TALK key in the ST CUE master section latches to allow a secondary use of the Talk Input pre-amplifier and compressor as an effect, using the Cue send as the output.

Artist Cue Mixes

The master Cue features of BiG SiX are designed to provide a separate artist mix from the engineer's monitoring and headphone feed using the Mono and Stereo Channel's Cue Send buses. Typically, the fully balanced outputs will be connected to a dedicated Headphone amplifier or Cue system, although there is enough level to drive many headphones directly with suitable wiring (balanced left and right outputs wired to unbalanced left/right headphone connection).

The EXT 1 and EXT 2 switches in the Foldback master section provide a simple way to feed an external source to the Foldback outputs. These are typically used when it would be useful to play something directly to the artist - for example a rough mix from a phone/DAW.

Foldback Outputs as Effects Sends

It is perfectly feasible to use the Cue Outputs as stereo feeds to external effects processors such as delays and reverbs. Typically, the processor's output would be connected to one of the External returns, then summed to the main bus using the External summing switches to the Main Bus above the Main Fader.

The CUE to USB feature provides a simple way to use effects in the DAW with send levels from BiG SiX. Similarly the USB to External Input feature provides a way to bring wet/processed signals back from the DAW.

Main Meter

The twelve Segment LED 'main' meter in BiG SiX follows the Monitor Source selector to provide a more versatile output metering solution. The fast response peak meter has specific segments for +24 dBu and +18 dBu as with the channel meters, it also has a +15 dBu segment for other standards as well as 0 dBu. The meter has a fast peak response (rise time to 60% Full Scale Deflection approx 1 ms @ 1 kHz) and a slower release to meter peaks while still showing useful signal levels.

Bus B Master

The secondary BUS B in BiG SiX provides an alternate routing for the channel signal outputs when the channel MUTE keys are pressed. At the rear of the console there are a pair of 1/4" TRS output jacks for Bus B. The LEVEL control provides a master output level and the MUTE switch mutes the output signal.
The Monitor Source section has a BUS B switch to allow the monitoring of signals on the BUS B output. BUS B is also routed to via a pair of A/Ds to the USB channel 13 & 14 Sends.

Main Bus

The Main Stereo Bus on BiG SiX connects to dedicated MAIN 1/4" TRS output jacks on the rear connector panel. These are balanced TRS connectors. Additionally, the Main Bus is connected via a pair of A/Ds to the USB channel 15 & 16 Sends.

The high quality 100 mm Main Bus stereo fader controls the Main Bus level to the Main outputs and has gain up to +10 dB. As with the channel faders, the fader law is designed to provide more resolution around the 0 dB point, allowing subtle level changes from modest fader movements.

External to Main Bus Summing

Above the Main Fader are switches for the Main Bus Insert (See below), EXT 1 and EXT 2. These last three switches sum these signals onto the Main bus. This provides the ability to sum four additional signals into the Main bus. An example of how this can be used is to add additional analogue summing from DAW outputs, or to return effects signals into the main mix.

Main Bus Insert

In the Main Output signal flow is a fully balanced stereo insert. In common with larger SSL consoles, the Insert Send is always active, while the Insert Return switches into the signal path when selected.

The primary use for this is to insert external processing into the Main Bus signal path. For example to insert an analogue colouration processor, such as SSL's Fusion. As the Insert Send is at unity gain, it also provides a useful pre-processing and pre-fader Main Bus split output.

The switched Insert Return also provides a direct, pre-fader input into BiG SiX's Bus Compressor circuit so that this circuit can be used outside of the normal BiG SiX signal flow.

The Main Bus stereo insert send and return are connected with 1/4" TRS jacks on the rear panel.

SUM INPUT TO MAIN BUS

The "SUM I/P TO MAIN connections on the rear panel are a simple pair of unity gain, stereo, buffered line input connections that sum directly onto the Main Left and Right buses. Typically these might be used to cascade the mix bus signals from another sub-mix console onto the BiG SiX Main bus, such as an SSL SiX console as illustrated below.

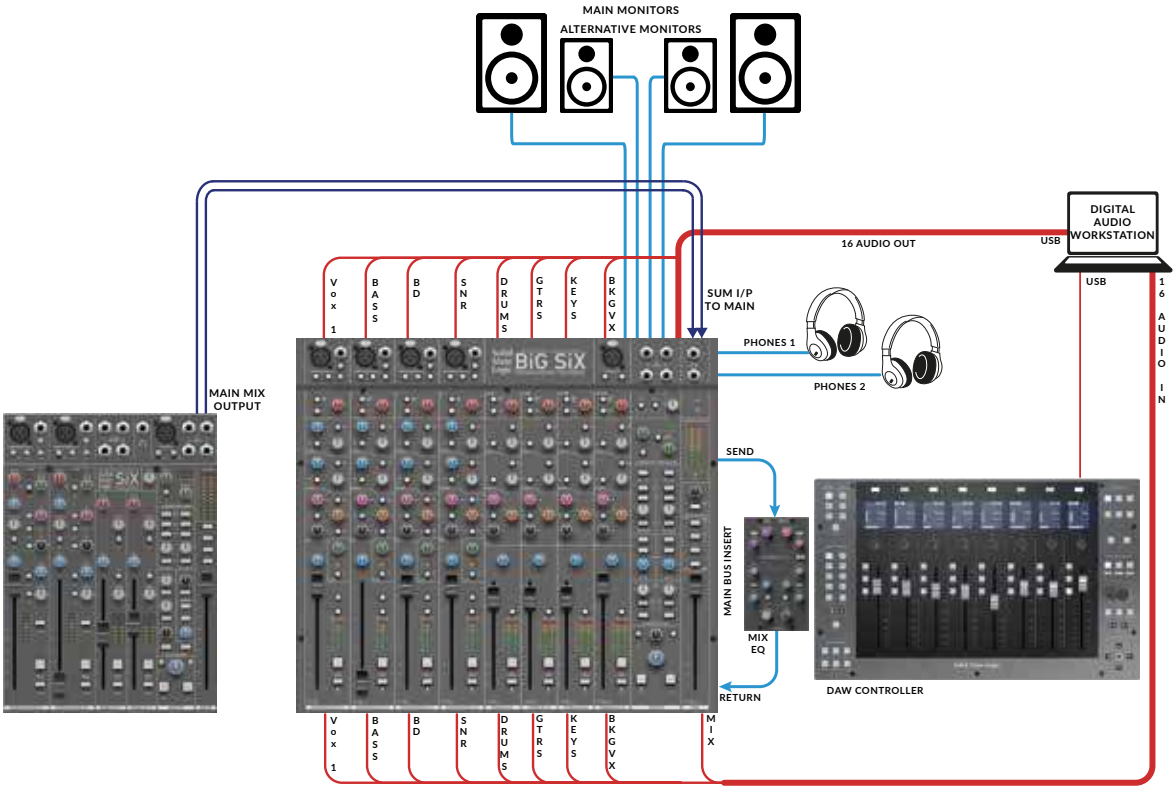

Main Mix Bus Block Diagram showing 'Sum I/P to Main' connection on left hand side.

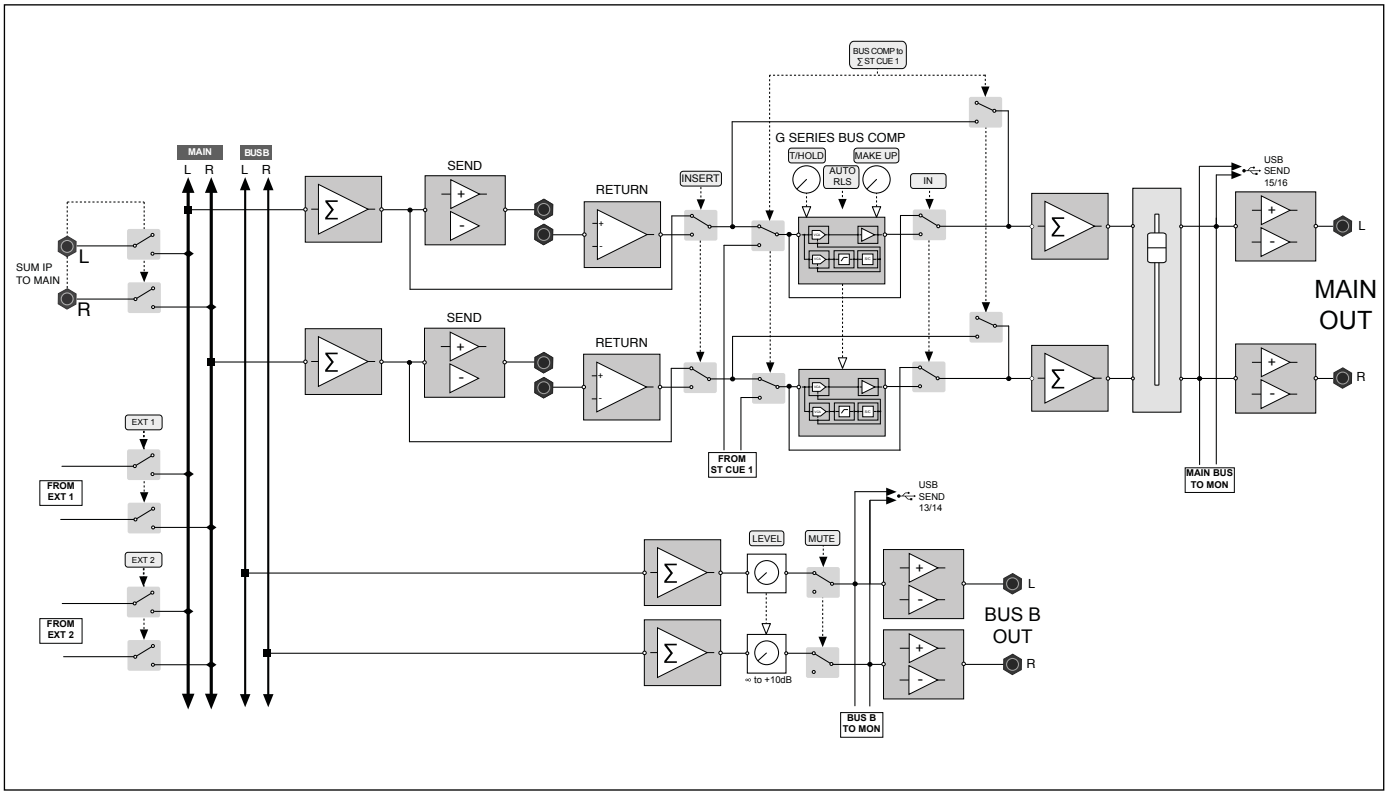

ST CUE 1 TO G COMP & SUM TO MAIN BUS

This somewhat strangely named switch/feature allows the use of Stereo Cue 1 to create parallel mixes. A typical example is where you want to use the bus compressor to act on a drum mix and this to then be summed in parallel to the main mix i.e. creating a compressed drum mix, but with other elements left uncompressed. By creating the parallel drum mix on Stereo Cue 1 from the console's channels, if you then press ST CUE 1 TO G COMP & SUM TO MAIN BUS the Stereo Cue 1 mix passes through the G Series Bus Compressor and it is summed with the Main mix, while the Main mix bypasses the G-Series Bus Compressor. e.g.

Normal signal flow:

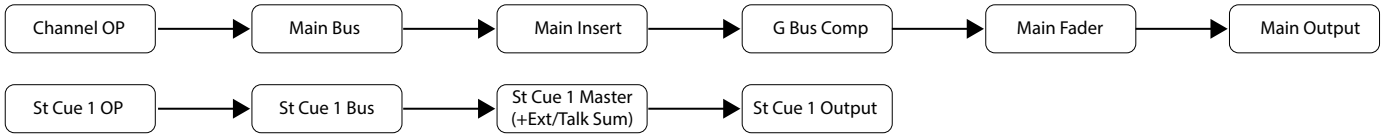

With ST CUE 1 TO G COMP & SUM TO MAIN BUS selected:

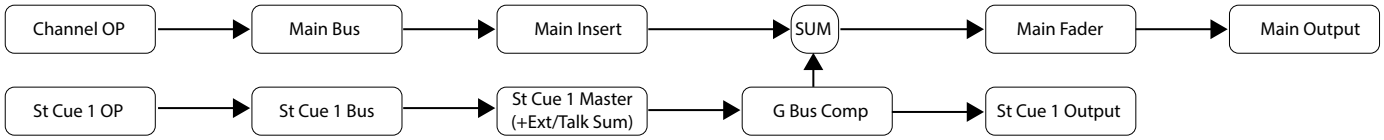

Main Mix Bus Block Diagram

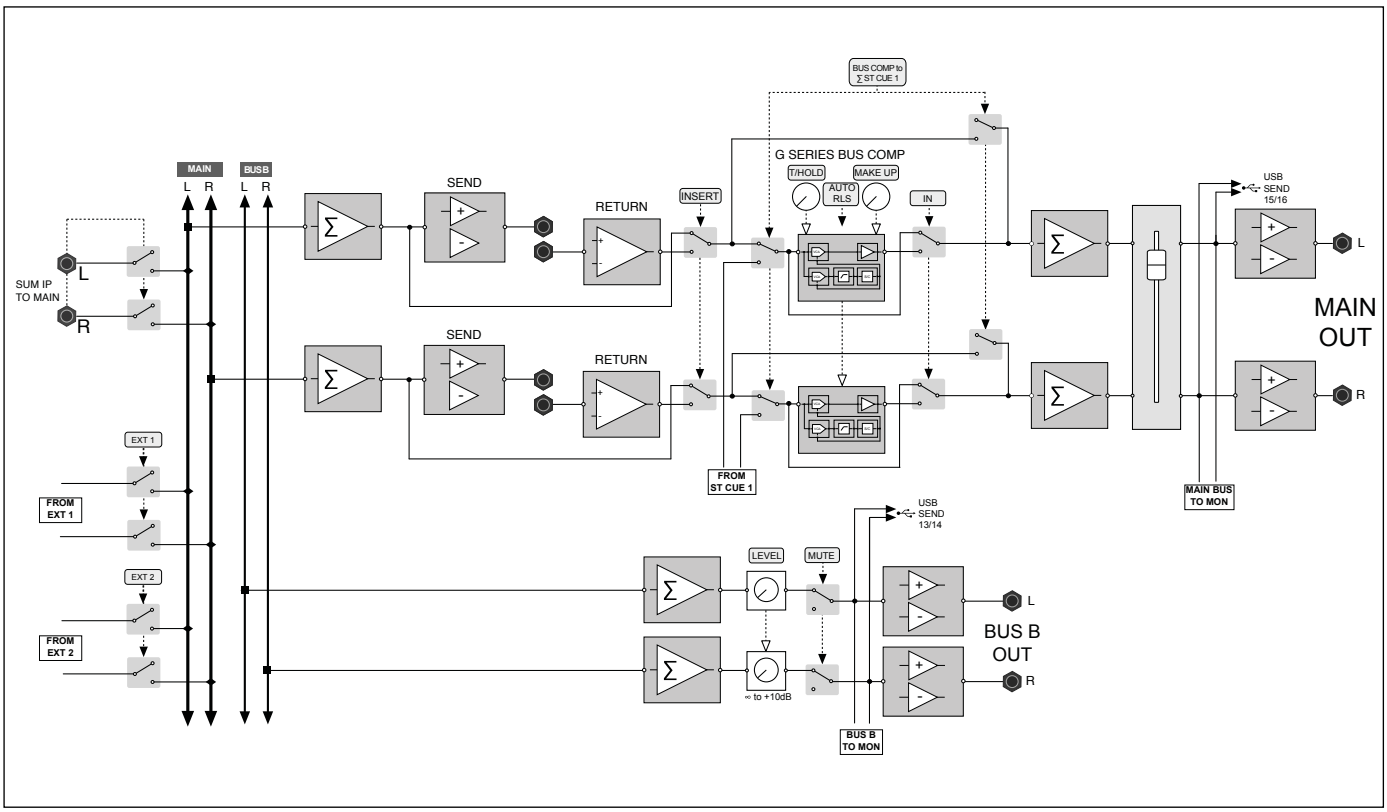

G-Series Bus Compressor

The G Series Bus Comp in BiG SiX is a stereo compressor applied across the Main Mix bus, using exactly the same circuit topology as the original design found on the SL4000 G-Series console released in 1989 (which in-turn was evolved from the earlier E-Series consoles).

The T/HOLD pot adjusts the Threshold for the compressor, with five LEDs indicating the amount of gain reduction applied (-1, -3, -6, -9, -15 dB). The compressor uses the 4:1 ratio, 30 ms attack and 100 ms release settings from the original processor which are preferred settings for many SSL large format console users. BiG SiX also features a selectable AUTO RELEASE switch. This changes the 100 ms release setting and uses the same dual rate Auto Release characteristic as the original G-Series Bus Compressor, which is another popular setting option from the larger consoles for some users. The dual release time constant Auto Release circuit automatically increases the release time once the compression acts over a longer time period. This results in shorter release times after short transient compression and longer release times from more continuous compression action. Auto Release can result in longer release times depending on signal content which may appear as if the LED meters are 'stuck on', however this is normal behaviour. Adjustable MAKE UP gain and a bypass 'IN' switch allow level matching and switching for direct comparisons of the clean and processed signals.

The bus compressor side chain also has a 1st order High Pass Filter at approx 50 Hz, a feature of more modern SSL bus compressor designs to give smoother performance from mixes with prominent bass content.

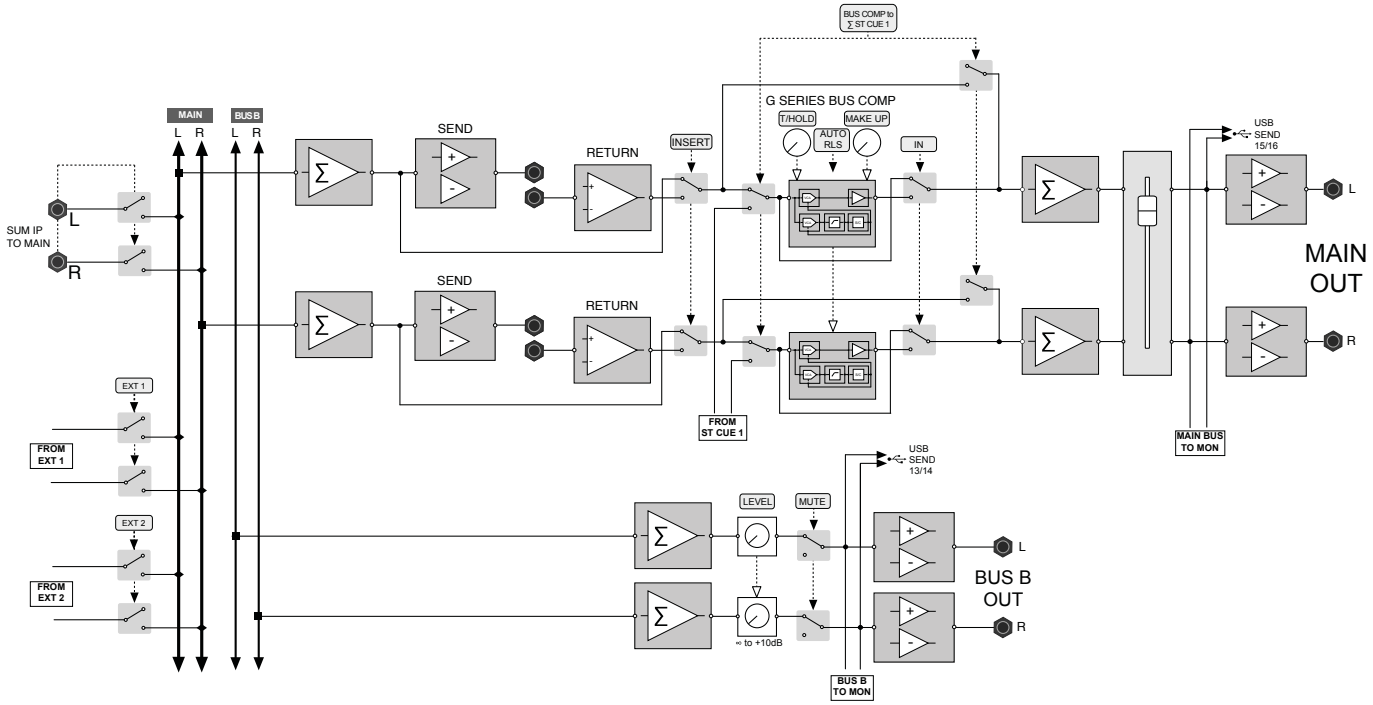

Main Bus Block Diagram

USB-C Interface

BiG SiX contains a class compliant USB interface to connect to a PC or MAC. The interface is paired with 16 high quality A to D and D to A converters that are connected to the SuperAnalogue signal chain in BiG SiX.

USB Cables & Power

Please use one of the provided USB cables ('C' to 'C' or 'C' to 'A') to connect BiG SiX to your computer. The connector on the rear of BiG SiX is a 'C' type. The type of USB port you have available on your computer will determine which of the two included cables you should use. Newer computers may have 'C' ports, whereas older computers may have 'A'. As this is a USB 2.0 compliant device, it will make no difference to the performance as to which cable you use.

BiG SiX is powered independently from the computer's USB-bus power. When the unit is locked to USB correctly, the green USB LED will light a steady green colour. For best stability and performance, we recommend using one of the included USB cables. Long and low quality USB cables (especially 3 m and above) should be avoided as they tend to suffer from inconsistent performance.

USB Hubs

Wherever possible, it is best to connect BiG SiX directly to a spare USB port on your computer. If you do need to connect via a USB 2.0 compliant hub, then it is recommended that you choose one of high enough quality to provide reliable performance - not all USB hubs were created equal. With BiG SiX, we optimise the audio performance of a USB interface and as such, some low-cost self-powered hubs might not always be up to the task. Usefully, you can check out our FAQs at **solidstatelogic.com/support** to see which hubs we've succesfully used and found to be reliable with BiG SiX.

Safety Notices

Please read the Important Safety Notices supplied in the BiG SiX packaging before use.

System Requirements

Mac and Windows operating systems and hardware are constantly changing. Please search for *'BiG SiX Compatibility'* in our online FAQs to see if your system is currently supported.

Drivers and Downloads

USB Drivers, Mac and Windows.

Mac

The USB interface in BiG SiX is Core Audio compliant, which means it should be seen by a Apple's OSx software without the need for any additional drivers. Core Audio was introduced by Apple in OSx version 10.3 (Panther), however the BiG SiX USB interface has only been tested with Apple OSx version 10.14 (Mojave) or later.

Once connected to OSx, the audio driver for BiG SiX should be visible in the Sound Preferences panel.

To manage the routing of the Mac System Audio to BiG SiX, this is set-up using the AUDIO DEVICES menu of the AUDIO MIDI SETUP menu, typically found in the Applications/Utilities Menu of OSx e.g.

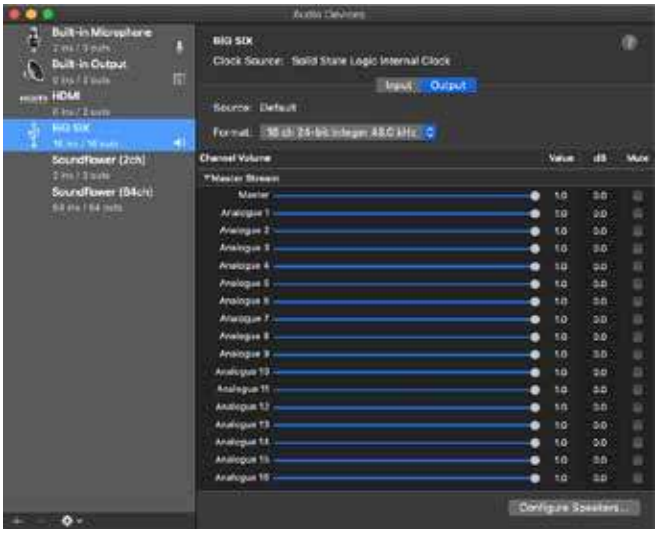

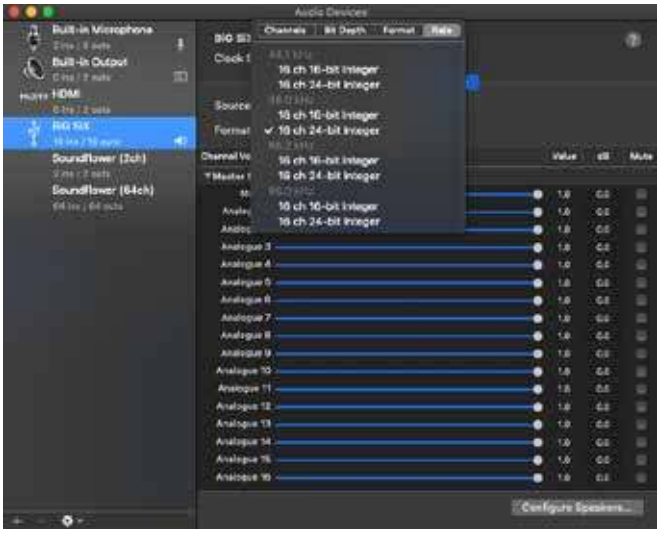

Also in this menu is where the Mac's audio routing to the BiG SiX may be set-up, using the CONFIGURE SPEAKERS menu on this page. For example, you may want to configure the Mac output to send to EXT 2 on BiG SiX, in which case routing the 'Speakers' to Outputs 15/16 will enable this, shown in this diagram on the right...

By selecting BiG SiX as the audio interface in the DAW, all 16 USB channels will be visible to the DAW. How these are displayed is controlled by the DAW, for example, in Logic Pro, this is how BiG SiX appears in the PREFERENCES/AUDIO/DEVICES menu...

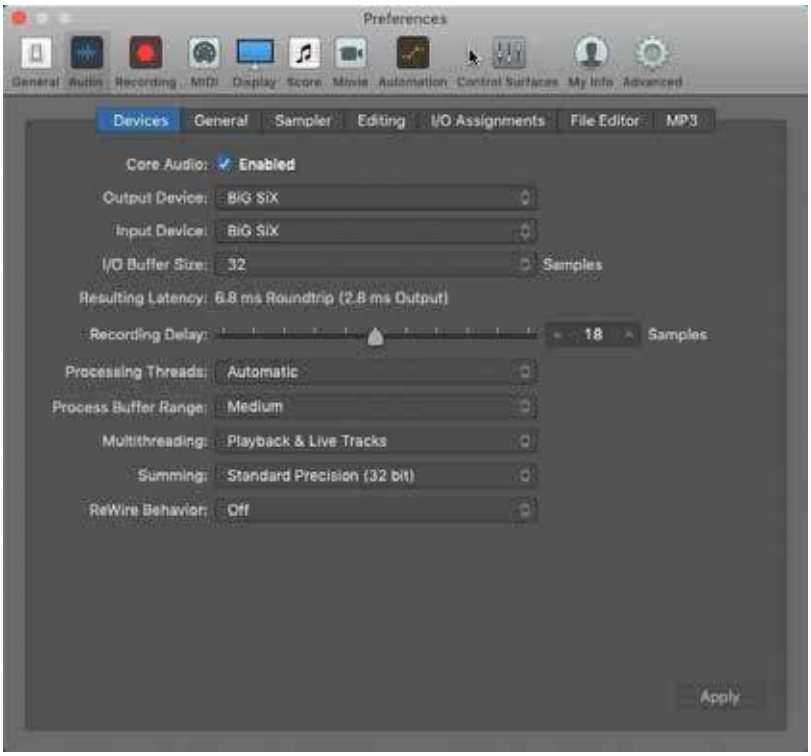

The outputs from BiG SiX now appear as discrete sources for the input routing of the DAW again an example for Logic Pro is shown on the right...

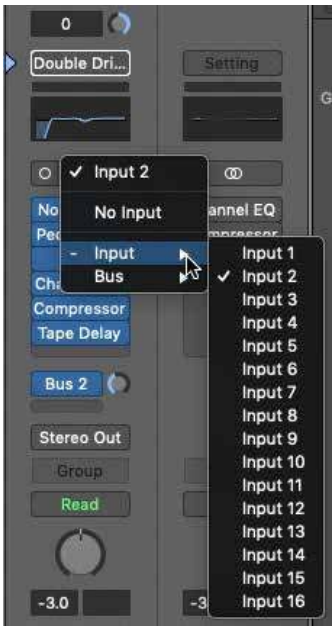

Similarly the inputs to BiG SiX appear as discrete sources for the output routing of the DAW again an example for Logic Pro is shown on the right...

It's worth noting that a quirk of Logic Pro is that the 'Stereo Output' routing is 'attached' to Logic's outputs 1 and 2. This can be changed in Logic's PREFERENCES/AUDIO/IO ASSIGNMENTS menu, however changing the default stereo output (for example to 15/16), doesn't release outputs 1 & 2 to be discretely routed from the DAW paths.

This can be resolved in Logic by creating an Aggregate Device in OSx. An internet search for "Logic Pro - Changing stereo output from 1-2" should discover some suggested solutions and further discussion of the issue.

Windows

Windows based PCs will need to install the SSL USB Audio ASIO/WDM driver, which can be found in the Support/Downloads section of the SSL website at www.solidstatelogic.com/. The USB Driver for BiG SiX is also shared with other SSL USB interfaces, if other SSL USB interfaces are connected then there will be a drop-down selector for the connected SSL USB devices.

After selecting 'Next' the screen changes to ask where the Driver is to be installed. A default location will be automatically chosen, but this can be over-ridden if required...

Windows Driver Installation

Open the driver installer software.

There should be a screen similar to this...

After selecting 'Next' the screen changes to ask where the Driver is to be installed.

A default location will be automatically chosen, but this can be over-ridden if required...

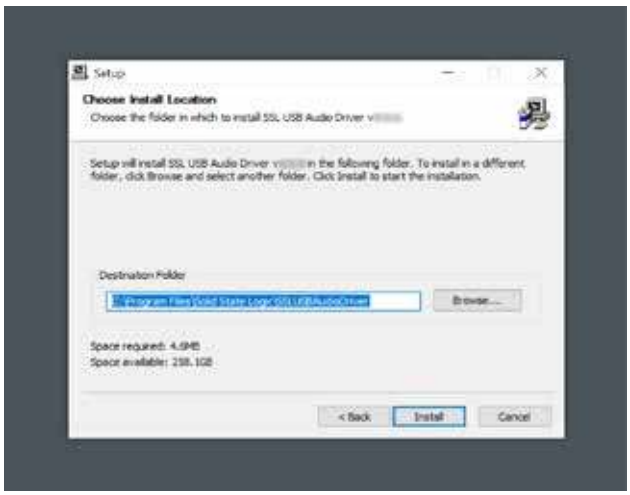

The install process should start and show the activity of the installer.

After a short while the installer should finish with the completion screen.

The final install procedure may be a prompt to re-start the computer or reconnect the device to complete the install process.

USB Interface in Windows

The BiG SiX Windows driver supports both ASIO and standard Windows audio support. The ASIO support will allow the 16 individual audio channels to appear to DAWs as discrete channels. You may need to set up your DAW to both see the SSL ASIO driver and also have the 16 inputs and outputs appear. For example, here's the Audio Device Preferences panel from Cockos' Reaper DAW. The Audio System is set to use ASIO driver and see USB inputs 1-16 and outputs 1-16.

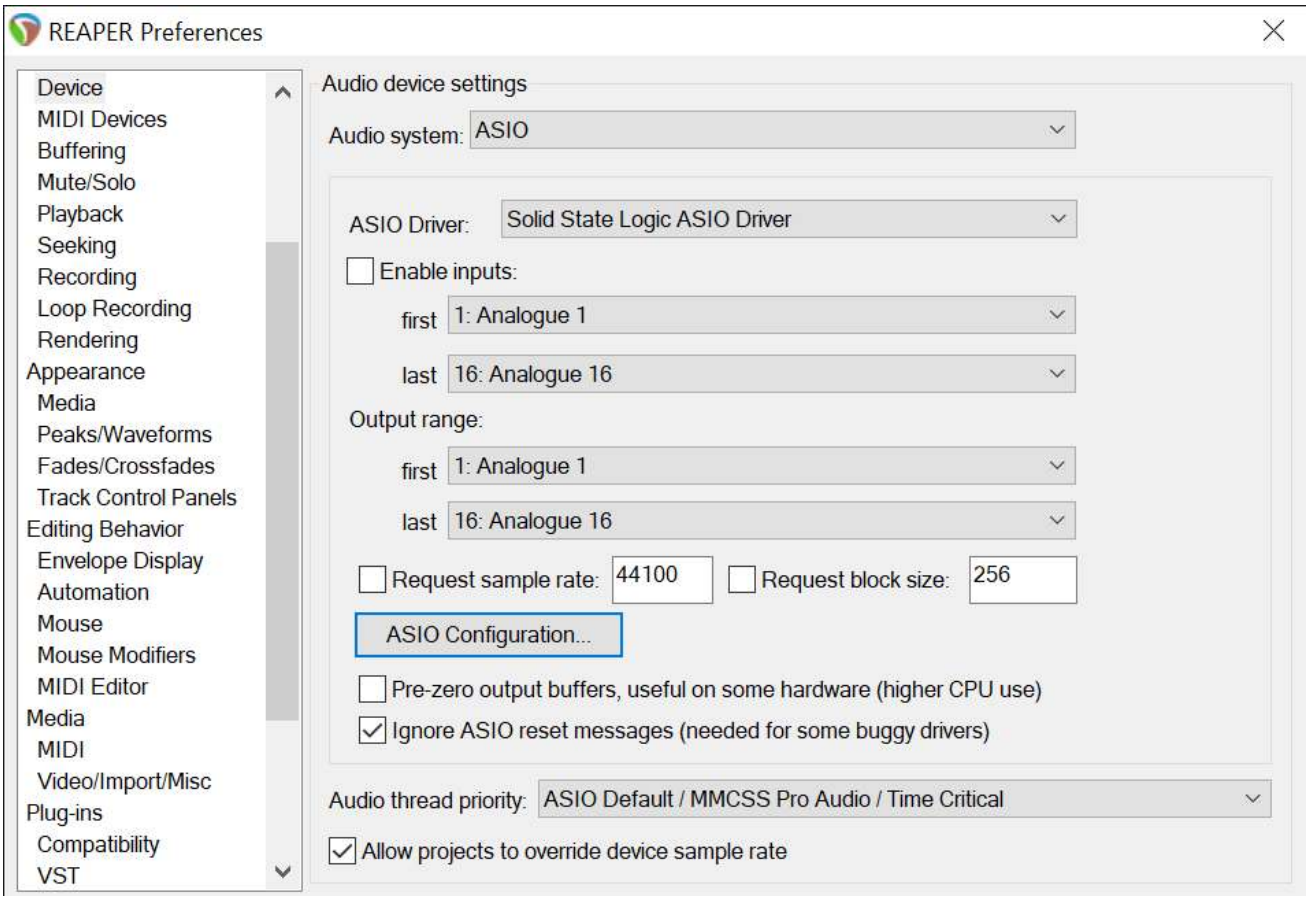

For the best and most flexible performance with DAW's ASIO is the preferred choice. For other Windows audio formats, the driver arranges the USB signals to and from BiG SiX in pairs, the output from the PC to BiG SiX are labelled as Output 1/2, Output 3/4, etc. to Output 15/16. Windows controls the order these pairs appear, so they may not be in sequence!

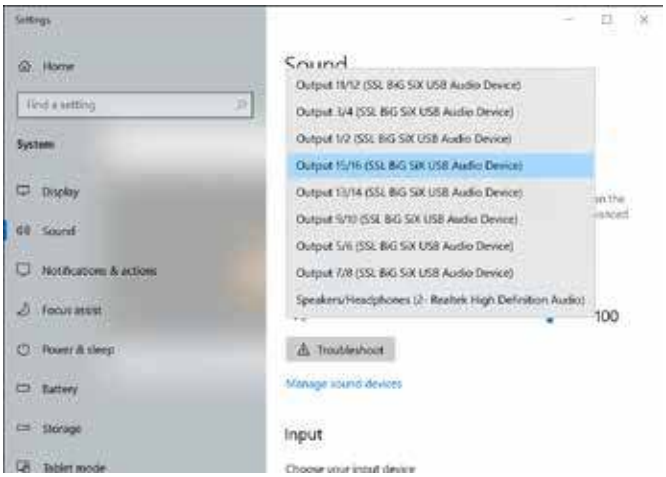

The inputs to the PC from BiG SiX are similarly labelled Input 1/2, etc. up to Input 11/12, the remaining Inputs are labelled according to their source, i.e. Input Bus B L/R and Input Main Mix L/R these are USB inputs 13/14 and 15/16 respectively.

USB Signal Routing and Block Diagram

BiG SiX retains all the SuperAnalogue signal quality attributes of its smaller sister SiX console, however with a larger footprint BiG SiX also incorporates 16 high quality Analogue to Digital and Digital To Analogue converters and a class compliant USB interface. This interface is capable of interfacing all 16 digital channels of digital audio to and from a connected workstation at sample frequencies of 44.1, 48, 88.2 and 96 kHz with 24 bit resolution.

The block diagram opposite shows how the A to D and D to A circuits are connected within BiG SiX.

USB Returns 1 - 16 (Signal flow from the DAW to BiG SiX)

USB returns 1 to 4 from the workstation are connected to a switched input to the four Mono SuperAnalogue channels. They are connected after the pre-amp and therefore are at unity gain (0 dB) into the mono channel signal path.

USB returns 5 to 12 are connected to a switched input to the four stereo channels. They are connected prior to the line amplifier and therefore are at unity (0 dB) in the centre detent position of the Trim control with +20 to -10 dB of gain available.

USB returns 13/14 and 15/16 are connected to the External Inputs by way of a pair of switches located next to the TALK LEVEL control. These switches override the TRS External Input connections at the top of the front panel. There are also small USB labels next to the EXT 1 and EXT 2 switches to act as reminders.

USB Sends 1 - 16 (Signal flow to the DAW from BiG SiX)

USB sends 1 to 4 to the workstation are connected to the pre-fader output of the four Mono SuperAnalogue channels. This feed can be switched Post Fader by selecting the individual USB OUT POST FADER switches next to each of the 100 mm faders for the channel. This is useful if you want to record the channel signal including its level back to the DAW. Typically this is used where a summing mix of stems is recorded back to the workstation, so that to re-create the mix at a later date, the stems are simply returned to the console with the channel at unity gain, re-creating the original summing mix for re-mixing/re-balancing.

USB sends 5 to 12 are similarly** connected to the pre-fader output of the four stereo channels. Again, this feed can be switched Post Fader by selecting the individual USB OUT POST FADER switches next to each of the 100 mm faders for the channel. These Post Fader feeds are also post the Balance control to make it easy to return a stereo stem mix at unity gain for later re-mixing.

** USB Sends 9/10 and 11/12 can be re-directed to be fed from Stereo Cue 1 and Stereo Cue 2 respectively using a pair of switches at the top of the Stereo Cue Master section. If either switch is pressed, the green LED will light. This feature is useful if you want to use the Stereo Cue Sends to feed effects processing created in the workstation. The effects return would typically be fed to the External Inputs and summed to the Main Bus using the EXT 1 and/or EXT 2 switches above the Main Fader.

USB Sends 13/14 are connected to the output of Bus B, after the Bus B MUTE and stereo Level Control.

USB Sends 15/16 are connected to the output of the Main Bus after the Main Fader, providing a simple way to print a mix back to the workstation.

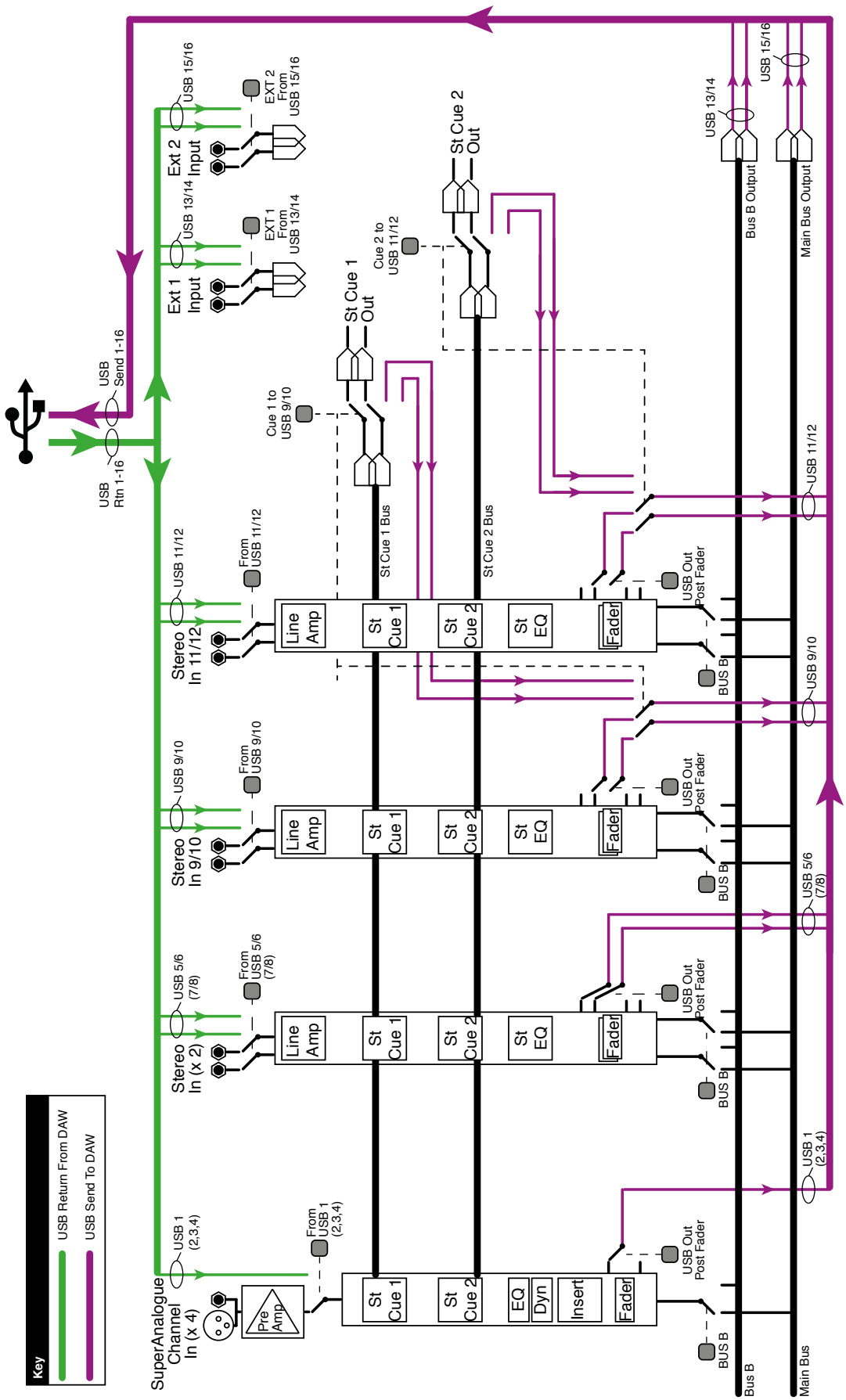
Key
USB Return From DAW
USB Send To DAW
USB Send 1-16
USB Rtn 1-16
Ext 2 Input
USB 15/16
EXT 2 From USB 15/16
Ext 1 Input
USB 13/14
EXT 1 From USB 13/14
Cue 1 to USB 9/10
St Cue 1 Out
Cue 2 to USB 11/12
St Cue 2 Out
USB 13/14
USB 15/16
Bus B Output
Main Bus Output
USB 11/12
USB 9/10
USB 5/6 (7/8)
USB 1 (2,3,4)
Stereo In 11/12
Stereo In 9/10
Stereo In (x 2)
SuperAnalogue Channel In (x 4)
From USB 11/12
From USB 9/10
From USB 5/6 (7/8)
From USB 1 (2,3,4)
Pre Amp
Line Amp
St Cue 1
St Cue 2
St EQ
EQ
Dyn
Insert
Fader
USB Out Post Fader
BUS B
St Cue 1 Bus
St Cue 2 Bus
Bus B
Main Bus

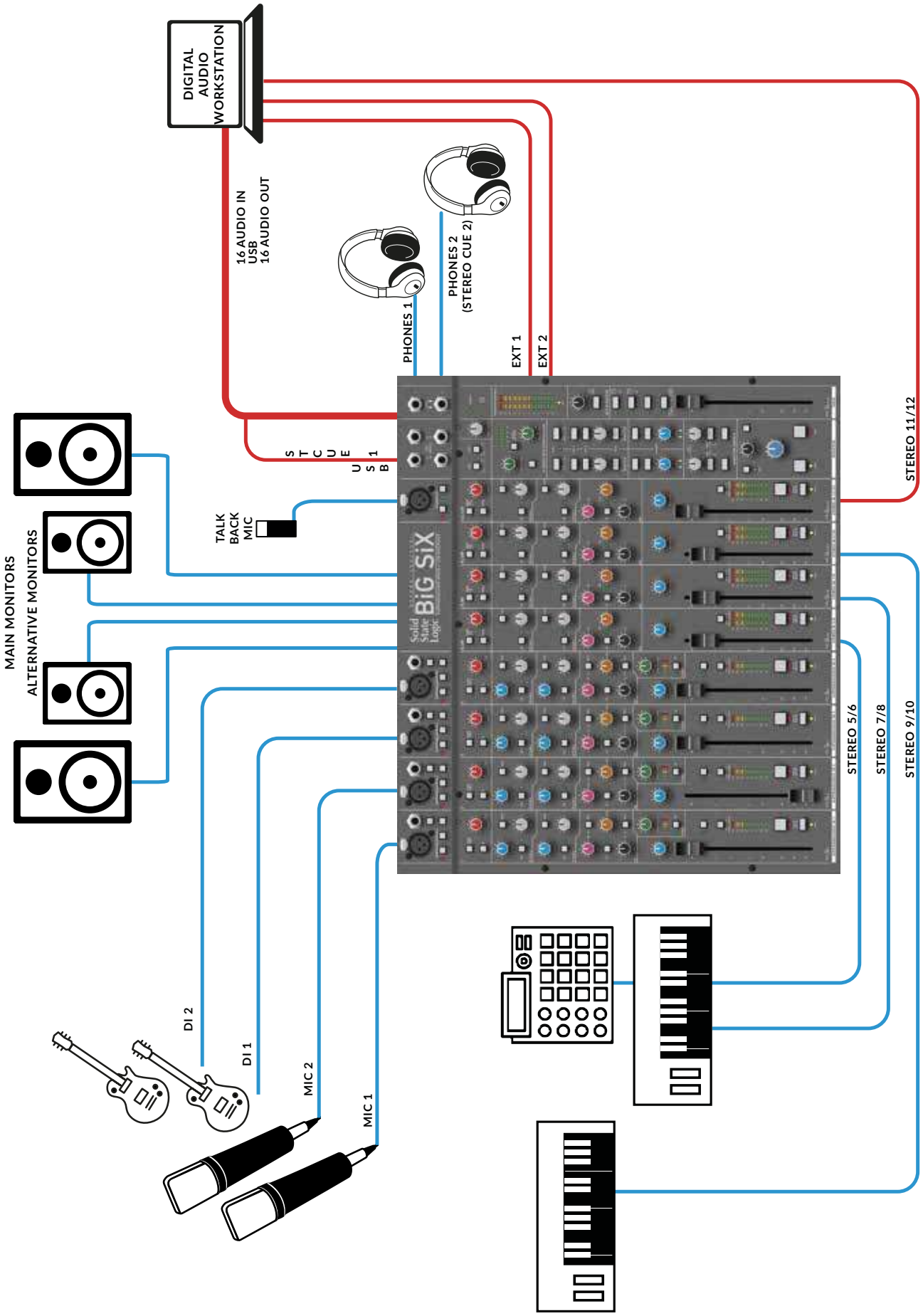
DIGITAL AUDIO WORKSTATION
16 AUDIO IN
USB
16 AUDIO OUT
PHONES 1
PHONES 2 (STEREO CUE 2)
EXT 1
EXT 2
STEREO 11/12
USB 1 STCUE
TALK BACK MIC
MAIN MONITORS
ALTERNATIVE MONITORS
BiG SiX
STEREO 5/6
STEREO 7/8
STEREO 9/10
DI 2
DI 1
MIC 2
MIC 1

Application Examples - Desktop Studio

Opposite is a simple application of BiG SiX in a typical desktop studio application.

The mics for the vocals and guitars are connected to the SuperAnalogue XLR microphone inputs then processed with the SSL Channel Compression and EQ. The headphone 2 output is used to feed the artists with the Phones source being Stereo Cue 2.

Sequenced drum machines and keyboards are connected to the Stereo Line Input channels 5-10.

Stereo Cue Send 1 is being routed to USB sends 9-10 and hence to the DAW, where they are being fed to reverb effects. The effects outputs are being returned via USB 13-14 to EXT 1 summed to the Main Mix (or into the Monitor Source, if the main mix is to be recorded dry).

The mics are recorded to the Digital Audio Workstation (DAW) from the Main mix bus, using the Stereo Bus Compressor to smoothly manage the combined transients.

DAW playback is sent into Stereo Channel 11/12, which is routed to Bus B, and then to the artists using the Stereo Cue 2 control. If useful, two separate DAW feeds can be used into two Stereo Channels allowing for separate click-track and playback level controls to the artist's cue feed.

The talkback system keeps the producer in touch with the artist using a phantom powered condenser Mic and the Listen Mic Compressor and TALK level control conveniently manage the talkback levels.

The Studio has two sets of monitors connected to the Main and Alternate monitor outputs, the monitor controls allow listening on large and small monitors and at different levels using the Dim switch and level control, the Mono selection allows simple mono compatibility check, for example to check if any 'wide' signals are disappearing in a mono listening environment, e.g. when listening on a single small speaker.

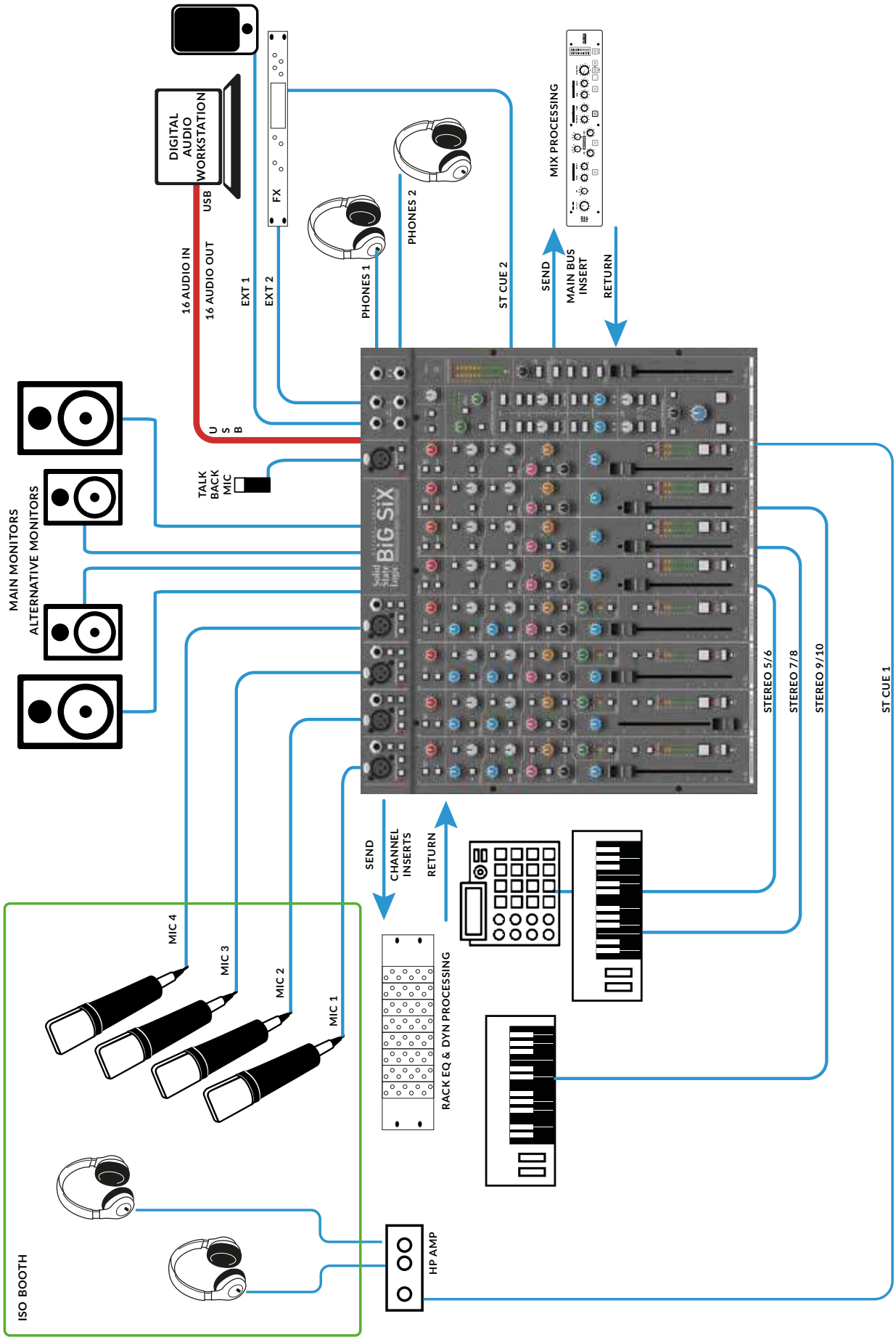
DIGITAL AUDIO WORKSTATION
USB
16 AUDIO IN
16 AUDIO OUT
EXT 1
EXT 2
FX
PHONES 1
PHONES 2
ST CUE 2
SEND
MAIN BUS INSERT
RETURN
MIX PROCESSING
MAIN MONITORS
ALTERNATIVE MONITORS
TALK BACK MIC
BiG SiX
STEREO 5/6
STEREO 7/8
STEREO 9/10
ST CUE 1
SEND
CHANNEL INSERTS
RETURN
RACK EQ & DYN PROCESSING
MIC 4
MIC 3
MIC 2
MIC 1
ISO BOOTH
HP AMP

Application Examples - Small Project Studio, Record/Overdub

Opposite is a simple application of BiG SiX in a typical small project studio application. A key difference in this example is that the artists are in an isolation booth and the two console headphone outputs are being used by a separate engineer and producer each with their own level control.

The microphones are connected to the SuperAnalogue XLR microphone inputs, the SuperAnalogue Channel Insert points are being used to send the amplified mic signals to external 500 series rack mounted EQ and Dynamics processor for precise control over signal levels and shaping. The Stereo Cue 1 output is used to feed the artists headphones via a dedicated headphone amplifier.

Sequenced drum machines and keyboards are connected to the Stereo Line Input channels 5-10.

Stereo Cue Send 2 is being used to feed an external rack effects processor. The processor output is being returned via EXT 2 and summed to the Main Mix and into Stereo Cue Send 1 to feed the artist foldback (or into the Monitor Source, if the main mix is to be recorded dry).

A phone/tablet is connected to EXT 1 to allow a rough idea of the musical piece to be played in to the studio and also, via Stereo Cue Send 1, to the artists.

The mics are recorded to the Digital Audio Workstation (DAW) directly from USB Sends 1-4 from the channels, pre-fader, or from the Main mix bus as a submix, using the Stereo Bus Compressor to smoothly manage the combined transients.

DAW playback is sent into Stereo Channel 11/12, which is routed to Bus B, and then to the artists using the Stereo Cue 2 control. If useful, two separate DAW feeds can be used into two Stereo Channels allowing for separate click-track and playback level controls to the artist's cue feed.

The talkback system keeps the producer in touch with the artist using a phantom powered condenser Mic and the Listen Mic Compressor and TALK level control conveniently manage the talkback levels.

The Studio has two sets of monitors connected to the Main and Alternate monitor outputs, the monitor controls allow listening on large and small monitors and at different levels using the Dim switch and level control, the Mono selection allows simple mono compatibility check, for example to check if any 'wide' signals are disappearing in a mono listening environment, e.g. when listening on a single small speaker.

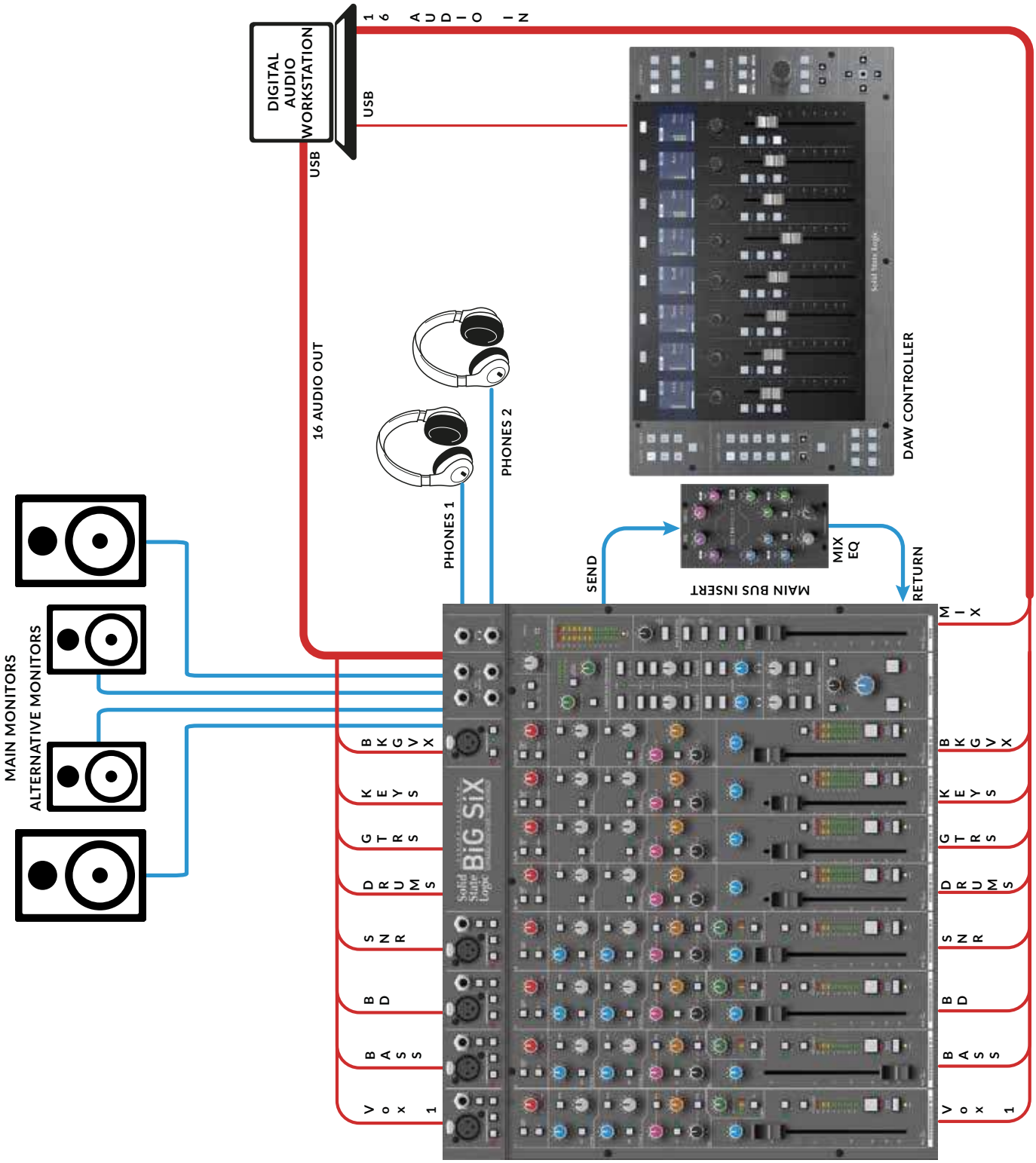
DIGITAL AUDIO WORKSTATION
USB
USB
16 AUDIO IN
16 AUDIO OUT
DAW CONTROLLER
PHONES 1
PHONES 2
MAIN MONITORS
ALTERNATIVE MONITORS
SEND
RETURN
MIX EQ
MAIN BUS INSERT
MIX
BGVX
KEYS
GTRS
DRUMS
SNR
BD
BASS
VOX 1
BiG SiX

Application Examples - Small Project Studio - Hybrid SuperAnalogue Mixdown

In this example, BiG SiX is being used as part of a hybrid mixdown setup.

Individual signals and stereo stems are being fed to BiG SiX via USB from the DAW, with separate stem mixes for the various components of the mix. The detailed balance of the stems is controlled using the external DAW controller (in this case SSL's UF8). The stems are mixed/summed in BiG SiX over USB and the mix balanced using the faders, pan controls and SuperAnalogue processing. The overall mix is compressed using the Bus Compressor with a stereo EQ placed in the Main Bus Insert.

The output of the channel paths of BiG SiX are being recorded back to additional tracks the DAW using the Post Fader USB output, allowing the balanced stem tracks to be printed to separate tracks on the DAW. This enables simple re-balancing at a later date by sending the stem tracks back to BiG SiX with its paths and faders at unity gain. The Main Mix is also being sent back to the DAW to print the main mix alongside the stems.

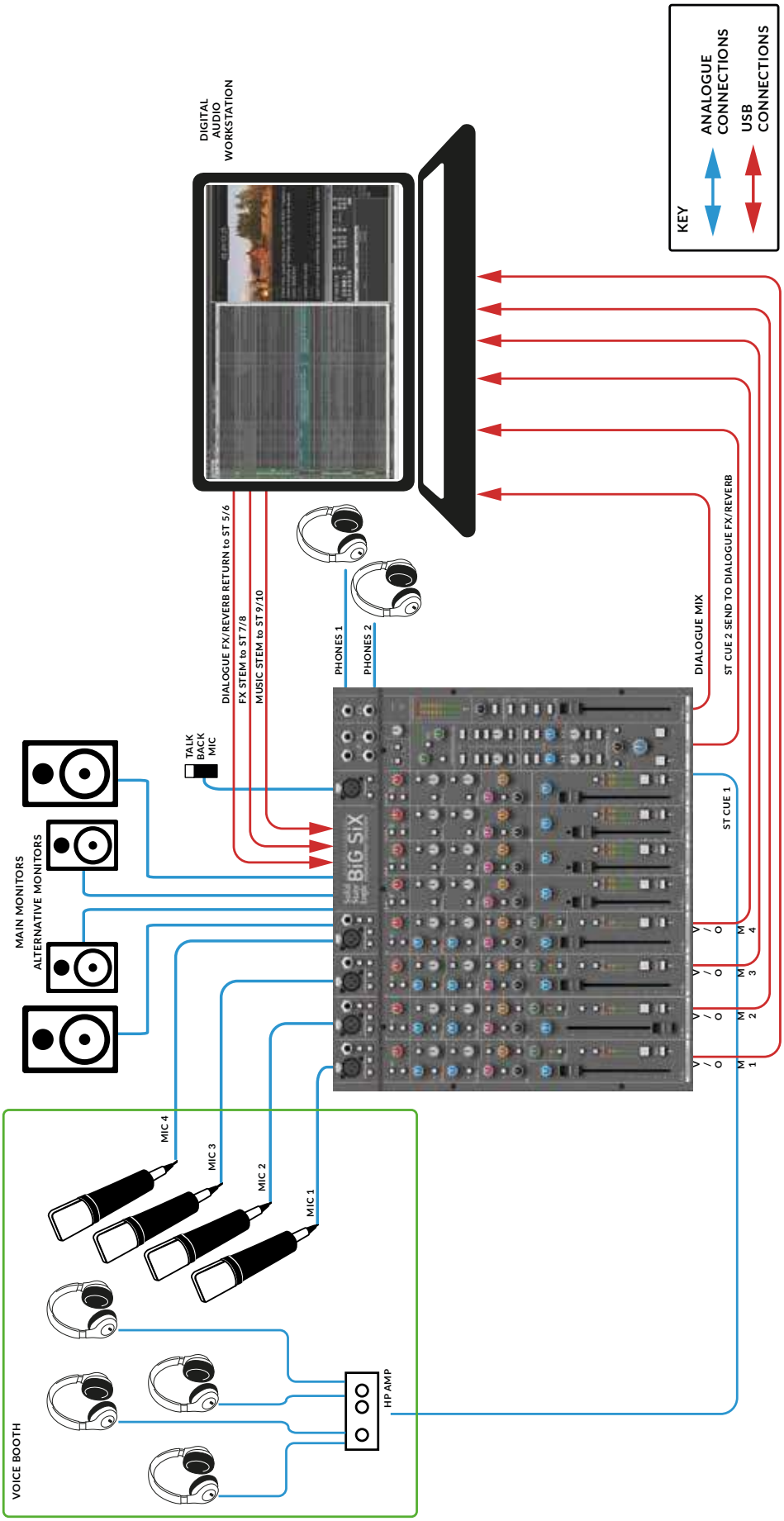
KEY
ANALOGUE CONNECTIONS
USB CONNECTIONS
DIGITAL AUDIO WORKSTATION
DIALOGUE FX/REVERB RETURN to ST 5/6
FX STEM to ST 7/8
MUSIC STEM to ST 9/10
PHONES 1
PHONES 2
DIALOGUE MIX
ST CUE 2 SEND TO DIALOGUE FX/REVERB
TALK BACK MIC
MAIN MONITORS
ALTERNATIVE MONITORS
BiG SiX
ST CUE 1
V/O 1
V/O 2
V/O 3
V/O 4
MIC 1
MIC 2
MIC 3
MIC 4
HP AMP
VOICE BOOTH

Application Examples - Post Production - ADR or Foreign Language Dubbing

In this example, BiG SiX is being used as the hub of a multi-mic ADR or foreign language dubbing suite.

The key elements are low latency headphone feeds for the actors, Talkback from the studio to the VO booth and separate record feeds and cue send for both artist headphone mix and dialogue reverb.

The guide Effects (FX) and Music stems are being fed via USB from the DAW to Stereo Channels 7/8 and 9/10 respectively. These are then sent to Cue 1 to feed the actors' headphone mix using the Stereo Cue 1 output to feed a Headphone distribution amplifier.

The Actors' microphone(s) are being fed into SuperAnalogue Channels 1 to 4, and the outputs of these record channels are being fed independently to the DAW for recording via USB outputs 1-4.

Dialogue reverb effects created in the DAW are fed from Stereo Cue 2 mixes from SuperAnalogue Channels 1-4, using the Cue 2 Output to USB 11/12 Send feature. The output of these reverb effects from the DAW are then fed back to BiG SiX on USB to Stereo Channels 5/6 where they are sent to the actor's headphone mixes on Stereo Cue 1. The dialogue reverb could either be recorded directly within the DAW, or could be fed from the console back to the DAW on the USB output to the DAW from Stereo Channels 5/6. This may be useful if, as part of managing the dialogue reverb, the use of the console fader to manage the reverb balance was useful.

The stereo dialogue sub-mix is being recorded from the Main bus, via USB outputs 15/16. If desired, the reverb mix could be separated from the dry dialogue sub-mix by sending the reverb mix to Bus B on Stereo Channels 5/6 and then recording the Bus B output via USB outputs 13/14.

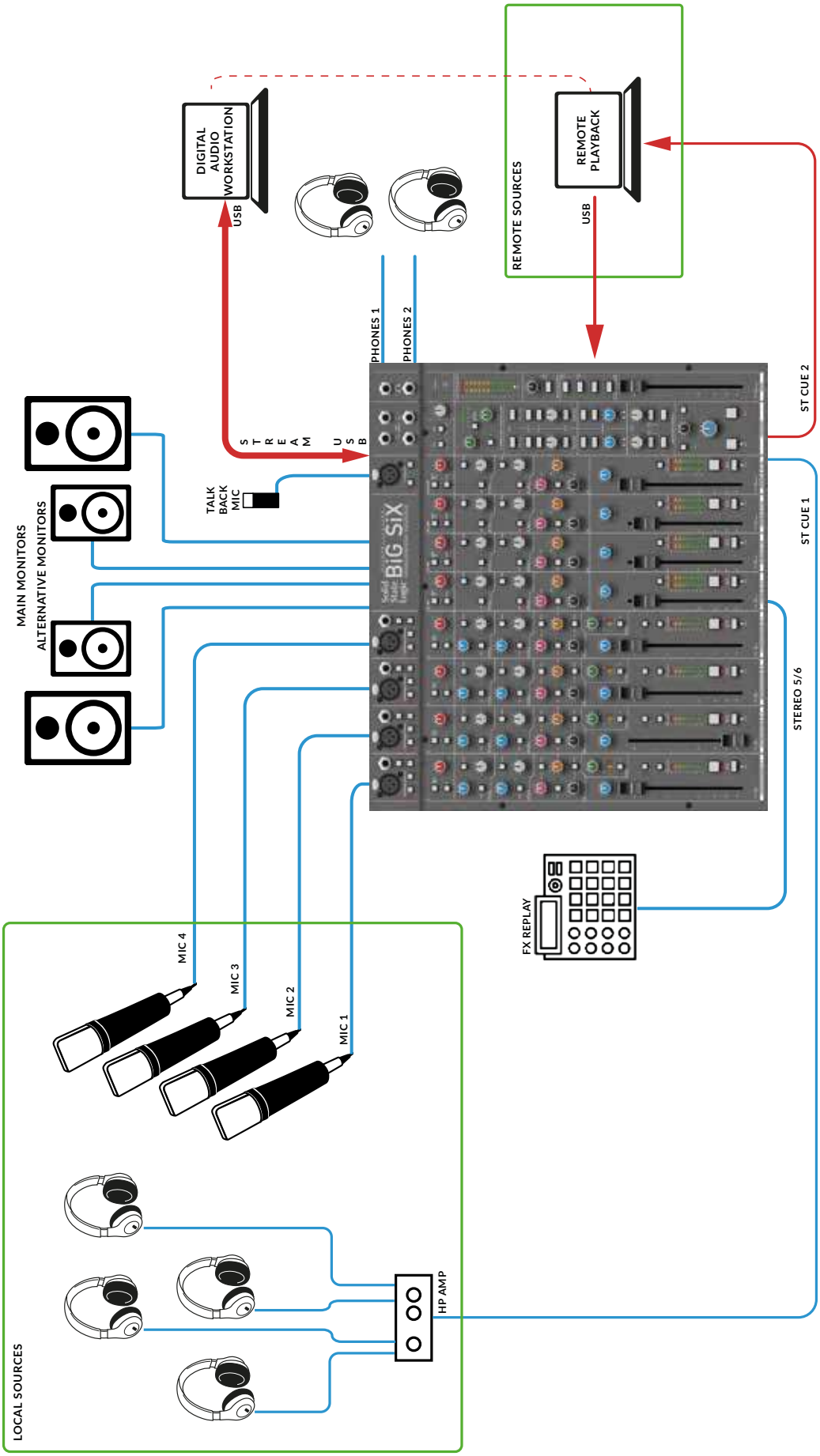
DIGITAL AUDIO WORKSTATION
USB
REMOTE SOURCES
REMOTE PLAYBACK
USB
PHONES 1
PHONES 2
ST CUE 2
STREAM USB
TALK BACK MIC
MAIN MONITORS
ALTERNATIVE MONITORS
BiG SiX
ST CUE 1
STEREO 5/6
FX REPLAY
MIC 4
MIC 3
MIC 2
MIC 1
HP AMP
LOCAL SOURCES

Application Examples - Podcast Studio

BiG SiX is a powerful choice for professional online content creation.

It's ideal for vloggers, producers and podcasters who need to achieve high fidelity audio recordings quickly and intuitively.

Here, BiG SiX acts as the nerve centre, with local sources including, four mic inputs connected to BiG SiX's high quality SuperAnalogue mic pre's, with SSL Compression and EQ, local playback connected to one of the Stereo Channels and remote playback feeds connected to the second stereo channel. Additional stereo sources can be incorporated via External Inputs 1 & 2.

There are separate local headphone and monitor mixes and a separate cue mix can be created for remote contributors.

The main mix is enhanced by the stereo Bus Compressor for an upload-ready record feed.

Troubleshooting & FAQs

Frequently Asked Questions and additional support contacts can be found on the Solid State Logic Website at: https://www.solidstatelogic.com/support/

Troubleshooting Tips

My BiG SiX is warm to the touch

BiG SiX's SuperAnalogue audio circuits are designed to run warm and BiG SiX contains a lot of electronics in a small space. BiG SiX is designed to cool front to back, so ensuring ventilation inlets and outlets (front and rear) have clearance is important to reliable operation.

There is no output from the monitors

Check that there is something selected in the monitor source section of the console (see page 13). A monitor source needs to be selected (typically MAIN) to hear something from the monitor outputs. Also check that the ALT button isn't pressed with nothing connected to the Alternate Monitor connections.

When I connect only to a Left Input, there is also a signal on the Right

This is a feature of the stereo inputs of BiG SiX (see page 11). If an input is only connected to the left input of the stereo input pair (i.e. Stereo Channel inputs and External Inputs) then the signal is automatically sent to both left and right paths.

There is no signal from the B-Bus output

Check that the the B-Bus Mute button is not pressed. This can be found under the B-Bus output level control which is to the left of the Main Fader. This button is a simple way to turn the Mute/B-Bus switches on the channel strips into permanant Mute buttons or simply mute the B-Bus Output if it is being used as a secondary bus output.

There is no signal from the SuperAnalogue Channels

Check the Channel Insert button. If this is ON with no Insert Return connected to the TRS connector then the channel signal will be muted. The Insert Send is always present and only the Insert Return is switched.

There is no signal to the Main Bus

Check the Main Fader Insert button. If this is ON with no Insert Return connected to the D-Type connectors then the Main Fader signal will be muted. The Insert Send is always present and only the Insert Return is switched.

Warranty

Warranty claims will only be accepted if the purchased product has been used for its intended purpose. Any purchased product used for an unintended purpose will not be eligible for warranty protection. For all warranty inquiries or claims please address your claim to the dealer that you purchased the product from or to Solid State Logic if the purchase was directly from Solid State Logic. Claims must be submitted within a period of two months from the date on which you detected its lack of conformity with the terms of the warranty. Please include your original proof of purchase when initiating the claim.

- Within the EU: Pursuant to the Solid State Logic Terms and Conditions under European consumer law the purchaser has full statutory warranty rights for two years from the date of purchase of the product. The warranty is valid only in those Member States of the European Union (EU) who have adopted the applicable EU law into their national legislation. The applicable national legislation governing the sale of consumer goods is not affected by this warranty.
- Outside of the EU: Outside of the European Union a 12 month warranty from date of purchase is applicable.

All returns

- No unit will be accepted for repair by Solid State Logic unless accompanied by a valid RMA (Return Material Authorisation) number, obtainable from Solid State Logic prior to shipping.
- All units should be shipped to Solid State Logic in suitable rigid packaging – Solid State Logic cannot be held responsible for any damage caused by shipping units in other packaging.

Appendix A - Physical Specification

Front to Back Depth	390.2 mm / 15.4"
Height (from table top inc. feet)	141.2 mm / 5.6"
Width	437.2 mm / 17.2" (Excluding Trim) 489.4 mm / 19.3" (Including Trim)
Power	70 Watts
Unboxed Weight	6.8 kg / 15.0 lbs (Console excluding PSU)
Boxed Size	Width x Height x Depth 600 mm x 260 mm x 540 mm (23.6" x 10.2" x 21.3")
Boxed Weight	10.1 kg / 22 lbs

Note: All physical specification values are approximate.

Connector Details

Mono Channels

Microphone Inputs

	3-pin XLR Male
Pin	Description
1	0 V Chassis
2	Signal +ve (Hot)
3	Signal -ve (Cold)

Line Inputs

	1/4" TRS Jack Socket
Pin	Description
Tip	Signal +ve (Hot)
Ring	Signal -ve (Cold)
Sleeve	0 V Chassis

Stereo Channels

Stereo Channel Line Inputs

	1/4" TRS Jack Socket
Pin	Description
Tip	Signal +ve (Hot)
Ring	Signal -ve (Cold)
Sleeve	0 V Chassis

External Inputs

Stereo External Line Inputs

	1/4" TRS Jack Socket
Pin	Description
Tip	Signal +ve (Hot)
Ring	Signal -ve (Cold)
Sleeve	0 V Chassis

Talkback Microphone Input

	3-pin XLR Female
Pin	Description
1	0 V Chassis
2	Signal +ve (Hot)
3	Signal -ve (Cold)

Foldback/Stereo Cue Outputs

	1/4" TRS Jack Socket
Pin	Description
Tip	Signal +ve (Hot)
Ring	Signal -ve (Cold)
Sleeve	0 V Chassis

Main Bus Outputs

	1/4" TRS Jack Socket
Pin	Description
Tip	Signal +ve (Hot)
Ring	Signal -ve (Cold)
Sleeve	0 V Chassis

Bus B Outputs

	1/4" TRS Jack Socket
Pin	Description
Tip	Signal +ve (Hot)
Ring	Signal -ve (Cold)
Sleeve	0 V Chassis

Main Monitor Outputs

	1/4" TRS Jack Socket
Pin	Description
Tip	Signal +ve (Hot)
Ring	Signal -ve (Cold)
Sleeve	0 V Chassis

Alternate Monitor Outputs

	1/4" TRS Jack Socket
Pin	Description
Tip	Signal +ve (Hot)
Ring	Signal -ve (Cold)
Sleeve	0 V Chassis

Insert Sends/Returns

	1/4" TRS Jack Socket
Pin	Description
Tip	Signal +ve (Hot)
Ring	Signal -ve (Cold)
Sleeve	0 V Chassis

DC Power Inlet

	4-pin DIN Male
Pin	Description
1,4	+15 V, 3.3 A
2,3	0 V Common
Shell	Chassis

Appendix B - Performance Specification

Audio Performance

Default test conditions (unless otherwise stated):

- Source impedance of Test Set: 40 Ω
- Input impedance of Test Set: 200 kΩ
- Reference frequency: 1 kHz
- Reference level: 0 dBu where 0 dBu = 0.775 V into any load
- All unweighted measurements are specified as 22 Hz to 22 kHz band limited RMS and are expressed in units of dBu
- The onset of clipping (for headroom measurements) should be taken as 1% THD
- All distortion measurements are specified with a 36 dB/Octave low pass filter at 20 kHz and are expressed as a percentage
- All levels are intended balanced

Unless otherwise quoted all figures have a tolerance of ±0.5 dB or 5 %.

SuperAnalogue Channel Microphone Amplifier

Measurement	Conditions	Value
Gain	**dependent on potentiometer tolerances	Variable from +6 dB to +72 dB**
Input Impedance		1.2 kΩ
Max Input Level	1% THD	21 dBu
Output Headroom		>+27 dBu at onset of clipping
Frequency Response	- 20 Hz to 20 kHz - -3 dB high rolloff	- +0.0/-0.2 dB - > 80 kHz
THD+Noise	(-20 dBu applied, +30 dB gain) @ 1 kHz (filter 22 Hz to 22 kHz)	- < 0.0015 %
CMRR	(-10 dBu applied, +30 dB gain) @100 Hz	- > 90 dB
Equivelent Input Noise (EIN)	150 Ω termination, maximum gain	- <-127.5 dBu - typically -129 dBu

SuperAnalogue Channel Line Input Amplifier

Measurement	Conditions	Value
Gain	**dependent on potentiometer tolerances	Variable from -3 dB to +63 dB**
Input Impedance		10 kΩ
Hi-Z Input Impedance		1 MΩ
Max Input Level	1% THD	>+27 dBu before clipping
Output Headroom		>+27 dBu at onset of clipping
Frequency Response	- 20 Hz to 20 kHz - -3 dB high rolloff	+0.0/-0.2 dB > 80 kHz
THD+Noise	(-20 dBu applied, +30 dB gain) @ 1kHz (filter 22 Hz to 22 kHz)	< 0.0015 %
CMRR	(-10 dBu applied, +30 dB gain) @100 Hz	> 80 dB
Equivelent Input Noise (EIN)	150 Ω termination, maximum gain	<-120 dBu

Channel Equaliser

Signal applied to line input and measured at the channel insert send. EQ switched in with EQ controls centred in shelf mode.

Measurement	Conditions	Value
Output Headroom		>+27 dBu at onset of clipping
THD+Noise	+20 dBu @ 1 kHz (filter 22 Hz to 22 kHz)	< 0.0015 %
Noise		<-87.5 dBu

Channel Compressor

Signal applied to line Input and measured at the channel insert send. Compressor switched into channel path with the compressor's threshold set to +10 dB.

Measurement	Conditions	Value
	Ratio (slope) Threshold Attack Time Release Time	2:1 +10 to -20 dB (typical) 5 ms 300 ms
Output Headroom		>+26 dBu at onset of clipping
THD+Noise	+10 dBu @ 1 kHz (filter 22 Hz to 22 kHz) +20 dBu @ 1 kHz (filter 22 Hz to 22 kHz) Threshold @-20	< 0.07 % < 0.7 % (typical)
Frequency Response	- 20 Hz to 20 kHz	+0.2/-0.4 dB
Noise		<-87.5 dBu

SuperAnalogue Stereo Channel Line Input Amplifier

Signal applied to stereo channel line input and measured at main output insert send with the stereo channel's input gain trim and balance controls in their indent position with the stereo channel's fader adjusted for unity gain.

Measurement	Conditions	Value
Gain		Variable from -10 dB to +20 dB
Input Impedance		10 kΩ
Max Input Level	1 % THD	>+27.5 dBu before clipping
Output Headroom		>+27 dBu at onset of clipping
Frequency Response	- 20 Hz to 20 kHz - -3 dB high rolloff	+0.0/-0.2 dB > 100 kHz
THD+Noise	(-20 dBu applied, +30 dB gain) @ 1 kHz (filter 22 Hz to 22 kHz)	< 0.001 %
CMRR		>55 dB
Equivelant Input Noise (EIN)	150 Ω termination, maximum gain	<-93 dBu

Overall Channel Signal Chain Specifications

Signal applied to Line Input of a mono channel, and routed to specified output by shortest path. All controls set flat, out or at unity gain as appropriate. Pan set to full left or right.

Measurement	Conditions	Value
	Foldback, B-Bus & Main Output	
Output Headroom	into 600 Ω at onset of clipping into 10 kΩ at onset of clipping	>24 dBu >27.5 dBu
THD+Noise	+20 dBu @ 1 kHz (filter 22 Hz to 22 kHz)	< 0.0015 %
Frequency Response	20 Hz to 20 kHz -3 dB high rolloff	+0.0/-0.2 dB >80 kHz
Output Impedance		100 Ω
Pot centre detent accuracy:		+/-1 dB, typically <0.5 dB

Overall Console Noise

Measured at main outputs, channels routed as required with pans / balance controls centred, using Line input with termination. All controls set flat, out or at unity gain as appropriate, channel and master faders calibrated for 0dB.

Measurement	Conditions	Value
Noise at Main Output	1 mono channel routed (all other muted) All channels routed	<-90 dBu (<–116 dB with respect to +26 dBu) < –82.5 dBu (<–108.5 dB with respect to +26 dBu)

ADC and DAC Converter

Measurements taken at 48 kHz

Measurement	Conditions	Value
Alignment Level	0 dBFS	+24 dBu
THD+Noise	DAC -10 dBFS @ 1 kHz (filter 22 Hz to 22 kHz) ADC -4 dBFS @ 1 kHz (filter 22 Hz to 22 kHz)	0.001 % 0.0007 %
Dynamic Range	DAC A-weighted ADC A-weighted	117 dB 117 dB

Environmental Requirements

Temperature range:

Operating: +1 to 30 degrees Celsius.

Storage: -20 to 50 degrees Celsius.

Appendix C - BiG SiX Block Diagram

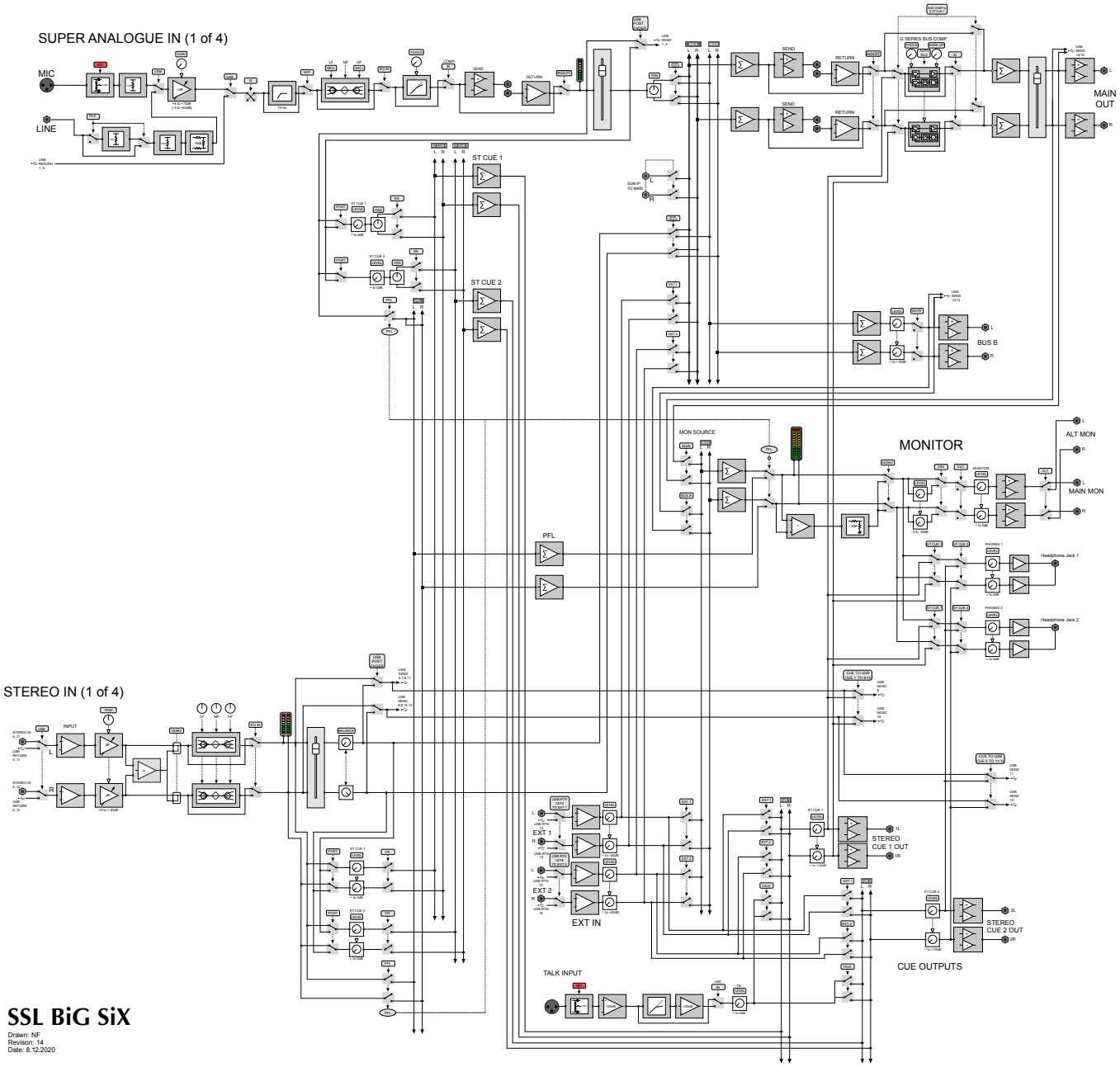

Appendix D - Recall Sheet

This image should scale if you print this page at larger sizes, e.g. A3

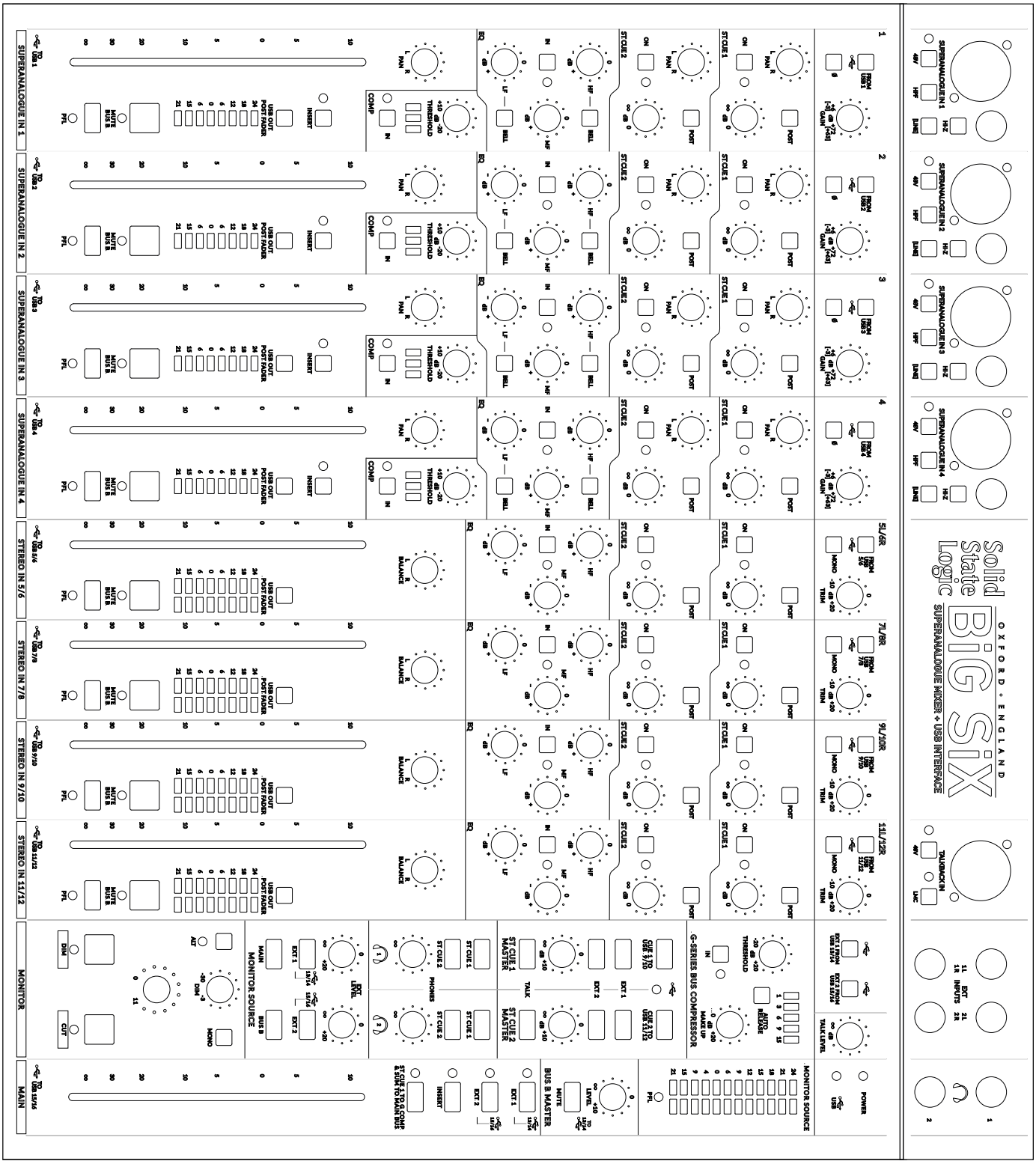

Notes

Notes